RESEARCH BULLETIN

NUMBER 22 DECEMBER 1970

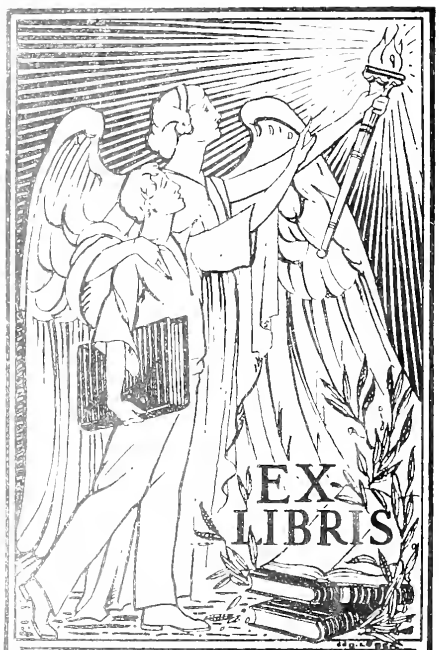

AMERICAN FOUNDATION
FOR THE BLIND INC.

TABLE OF CONTENTS

EARLY BLINDNESS, EARLY EXPERIENCE AND PERCEPTUAL ENHANCEMENT. 1
Charles E. Rice

HOW TECHNOLOGY WILL SHAPE THE FUTURE. 23
Emmanuel G. Mesthene

THE MEASUREMENT OF LENGTH BY CONGENITALLY BLIND CHILDREN AND A QUASIFORMAL APPROACH FOR SPATIAL CONCEPTS. 47
Peter Duran and Sylvia Tufenkjian

BRAILLE EMBOSSING AND TRANSMISSION EQUIPMENT. 71
Ray E. Morrison

ELECTRONEUROPROSTHETICS: HISTORY AND FORECAST. 83
Wendell Krieg

INSTITUTIONAL OR HOME CARE: A STUDY OF DECISIONS BY PARENTS WITH YOUNG MONGOLOID RETARDATES. 97
Nellie Stone

AN INEXPENSIVE BRAILLE TERMINAL DEVICE. 111

RESEARCH BULLETIN SUPPLEMENT. 131

Digitized by the Internet Archive
in 2010 with funding from
Lyrasis Members and Sloan Foundation

http://www.archive.org/details/researchbulletin22lesl

EARLY BLINDNESS, EARLY EXPERIENCE, AND PERCEPTUAL ENHANCEMENT

Charles E. Rice
Stanford Research Institute
Menlo Park, California

> The tradition that a kindly Providence is sure to compensate the blind by a quickening of their other senses goes back, like the popular belief in palmistry and astrology, to a hoary antiquity and shows a vitality which keeps it alive for the modern Sunday newspaper and for the fireside anecdote. . . but the general public has yet to be shown the error of the old belief; and every year other credulous young people grow to the age at which such subjects become interesting so they in turn need a clear statement of the case--Hayes, 1933.

Despite Hayes' efforts and subsequent experimental evidence to the contrary, many still believe that blind persons possess enhanced acuity of their nonvisual senses. One obvious reason for the tenacity to this belief is that many blind persons do perform activities beyond the expectations of naive observers. It is also true that to many laymen blindness connotes total loss of visual sensitivity when this, in fact, is not always true. Thus, an amazing "legally blind" lumberjack of my acquaintance is even more "amazing" to those who do not know that he still has useful vision. In addition to these reasons, it should be recognized that it is very difficult to prove that a phenomenon never occurs. Thus, although the existing weight of scientific evidence is against the theory of sensory compensation, the "possibility" remains and there will continue to be supporters with sincere conviction.

THE PROBLEM OF MEASUREMENT

The "sensory compensation" hypothesis has been the object of a number of scientific investigations dating back to the late nineteenth century. In typical studies a sample of blind persons has been compared to a sample of sighted test subjects on one or more tasks to determine whether the blind have superior nonvisual sensory abilities. Hayes (1941) and Axelrod (1959) reviewed both the early and recent attempts to resolve this question. In order for any form of compensatory process to be confirmed, there must be evidence demonstrating superiority of blind over sighted test

subjects on a suitable behavioral measure. Before conducting such research however, it is necessary to define what criteria are important in selecting blind test subjects, what kinds of tasks can serve as suitable behavioral measures, and what methodology can provide a reasonable test of the hypothesis.

Subject Selection

It is not clear from earlier literature whether the hypothesized sensory enhancement would be manifested in inversely proportional amounts to the degree of visual impairment or only when there is total blindness. If differences in sensory ability do exist as a function of loss of sight, however, then testing totally blind subjects should reveal them. It is also important that these totally blind subjects should have no known or likely impairment to their nonvisual sensory systems, since damage to these other modalities might obscure or prevent the sensory compensation. Two other subject variables which may affect detection of the phenomenon are age at onset of blindness and duration of blindness. Either could logically vary the probability of observing sensory compensation, if it does occur. These kinds of qualifications dictate that the subject samples be thoroughly described and also tends to negate the concept of a generic "blind population" for comparisons of the blind to the sighted. Persons afflicted with visual impairment are more appropriately divided into subgroups with respect to characteristics such as amount and kind of residual vision, age at onset, and the like. Most of the early studies of sensory compensation failed to make these distinctions clear.

Appropriate Tasks and Methods

The identification of suitable tasks to test a hypothesis of sensory enhancement presents an additional problem. Tests of sensitivity in the form of absolute threshold measurements have traditionally been used. Given suitable control of the stimuli and a standardized psychophysical technique, any marked superiority in sensitivity of the blind should have been revealed in several previous studies. The results show that in neither taction nor audition have the blind subjects proven more sensitive to minimum stimuli (Seashore and Ling, 1918; Hayes, 1941; Axelrod, 1959). A contemporary reevaluation with methods suggested by the theory of signal detection might, however, provide a useful check of the reliability of these conclusions.

In addition to basic sensitivity more complex problems have been presented for comparison measures. Two-point tactile discrimination, tactile object identification, complex tactile learning and learning set, auditory discrimination learning, and auditory localization are among the tasks that have been used.

The decision as to which kinds of tasks may throw light on the question at hand must be an a priori judgment of the investigator. There were logical reasons for selecting those used in previous studies. Sensitivity is a basic characteristic, its measurement was well established, and it could be related to a considerable neurophysiological background. Beyond sensitivity, however, both measurement techniques and the sensory processes themselves become more complex. It is only in recent years, for example, that the potential importance of immediate and short-term memory has been recognized in sensory studies. Also of relevance are the hypothesized autocorrelation and cross-correlation processes which may be particularly important to auditory and tactile perception (Cherry, 1961). The neurological switching and monitoring factors which govern the focus of attention to specific sources of stimulation are important to understanding any superiority in the nonvisual modalities. Thus if sensory compensation occurs, it could reside at any or all points from the passive receptor to the analyzing of patterns of complex information.

Previous Experimental Evidence

Of the numerous studies that have sought to discover whether nonvisual sensory differences exist between the sighted and the blind, the most comprehensive accounts are those reported by Seashore and Ling (1918), Hayes (1933, 1935, 1941), and Axelrod (1959).

Seashore and Ling used tasks that included localization of sound, discrimination of sound intensity, discrimination for lifted weights, passive pressure using palpation, and two-point threshold. They concluded that there was no difference in discrimination sensitivity between the blind and the sighted on these tasks. Further, the little data in support of blind subject superiority (in auditory localization) was attributed not to physiological differences in sensitivity but to differences in "apperception" gained with practice.

Hayes (1933) found the blind inferior on tests of auditory sensitivity and for tests of auditory problem solving. He did report, as did Seashore and Ling, that blind subjects were better at auditory localization of sound sources (Hayes, 1935). Hayes (1941) reviews most of the earlier studies on this subject and concludes that although not exclusively negative, the evidence strongly favors rejection of the sensory compensation hypothesis.

Axelrod (1959) presents a thorough examination of the effects of blindness on several kinds of sensory abilities, and, unlike his predecessors, he had access to research reports which revealed the detrimental effects of sensory restriction on the

development of sensory processes during infancy. Thus, rather than the orientation of previous studies which looked for sensory enhancement, he had reason to hypothesize performance decrements in those blind from birth. His was also the first study in which sufficiently careful attention was paid to specifying visual history, amount of visual impairment, and other relevant subject characteristics prior to his experiments. He divided his totally blind subjects into early blind (prior to two years of age) and late blind (after three years), while attempting to control for other subject characteristics through matching blind and sighted individuals.

Just as in preceding experiments, Axelrod found little support for sensory compensation. Only the index finger of the right hand was superior in two-point threshold in those classified as early blind.

On complex tactile and auditory discrimination tasks and a cross-modal learning set problem, early blind subjects were inferior to sighted subjects used as experimental controls. Yet he concludes that these differences, though significant, were small and should not be regarded as gross impairment.

Brown and Stratton (1925) conducted a rather well-controlled study using a form of two-point threshold. They compared blind and sighted subjects and found evidence of superiority of the blind in this task. The group, blind from birth, had the best scores, but the task used has been criticized as being too similar to braille to be good comparison of the two groups.

More recently comparisons of blind and sighted persons in the discrimination of textured surfaces (Stellwagen and Culbert, 1963) revealed no differences in ability. Hunter (1964) found congenitally totally blind subjects to be significantly inferior to sighted subjects on the judgment of spatial dimensions and orientation. Menaker (1966) also found congenitally blind children were developmentally retarded in their perception of a size-weight illusion.

NEW DATA AND A SEARCH FOR A CLARIFYING VIEW

Some time ago I began a program of research designed to explore the limits of human ability to use echoes as a source of information about the environment. This echo perception, formerly called "facial vision," had been demonstrated in both sighted and blind test subjects (Supa, Cotzin, and Dallenbach, 1944; Di Dea, 1947). Kellogg (1962) had found two sighted subjects to be less adept at a psychophysical measure of size discrimination by echo than two blind persons.

The initial task involved detecting sounds reflected from physical objects by discriminating these echoes from background noise. In the initial experiments no effort was made to divide blind subjects into early and late blind. The first test was conducted using five totally blind men. "Totally blind" was defined as having no spatial vision and no more light perception than would allow detection of sunlight. A detailed account of the methodology of this initial experiment appears in Rice, Feinstein, and Schusterman (1965) and will be reviewed later in this paper. The original task was to determine how small a circular metal disc could be, and still be detected using echoes. The psychophysical method of constant stimuli was employed to obtain an estimate of each subject's ability to detect the presence or absence of a target at each of several distances. This measure became a standard training and assessment procedure because it revealed reliable individual differences in ability (Rice, 1967). Each new subject was trained in this task, and an estimate of his minimum target size threshold was made at distances of 36, 48, and 67 inches.

After completing this experiment with the original five subjects, a sixth totally blind subject finished the same task. The performance of this subject (JK) was so superior to that of the previous five that investigation into possible reasons for this difference was warranted. The comparison of the percentage of "yes" responses to various size targets and the false positive percentage for JK and the other five subjects is shown in Fig. 1.

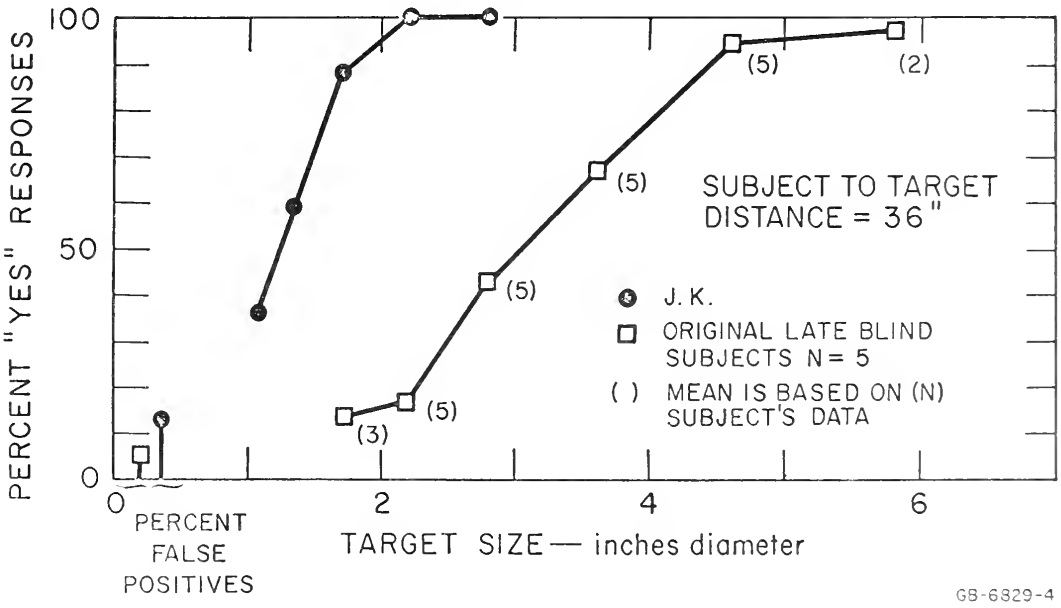

Figure 1. Small Target Detection Performance of Subject JK Compared to Original Late-Blind Group

The number of training trials necessary before beginning the detection task was 750 for JK, and the mean for the five late-blind subjects was 1,222. There were no apparent reasons for this superior performance. JK is not superior in intelligence test score or auditory sensitivity according to the audiograms, and is the same sex and approximate age as the other subjects. He had become totally blind prior to 6 months of age, while the others had become blind from 3 to 25 years after being born. The evidence of exceptional ability on the echo perception task was supplemented by observations of this subject in uncontrolled situations in which he demonstrated unusual ability (for a blind person) to orient spatially and to use nonvisual cues in moving about. It was decided to try to obtain additional early-blind test subjects to determine whether JK's superiority was chance or might be due to systematic differences in ability in those blind from early infancy.

EXPERIMENT I: MINIMUM-SIZE TARGET DETECTION

Subjects

Five additional early-blind subjects were found and employed in the study to increase the sample of early blind. None had any known or apparent defect in nonvisual sensory ability, intelligence, and travel mobility. Additional late-blind subjects were added and a sighted group was also employed. All subjects satisfied one of the following criteria:

Early-blind. Either total lack of vision or light perception but no form, color, or object perception. Duration of blindness was established by family and medical history, and all had severe loss of vision prior to six months of age.

Late-blind. Functional vision for object discrimination and orientation up to at least three years of age and a duration of total blindness or lack of light perception with no form, color, or object perception for the five years preceding initial testing.

Sighted. Vision used as primary source of orientation and mobility information.

Subjects were between 17 and 30 years of age. All but one blind subject (a late-blind) had finished high school and scored above average on the WAIS verbal intelligence test. Each blind subject had displayed above-average ability to travel away from home without human assistance, and was able to use public transportation to get to the laboratory. Sighted subjects were of ages and educational levels comparable to blind subjects.

None of the blind or sighted subjects had a history of difficulties with the nonvisual senses, and normal audiograms were a prerequisite for all.

Procedure

All subsequent subjects were trained and tested as were the original six subjects. A review of the procedures used may be helpful in understanding the task.

In this task the test subject was seated and blindfolded. A circular metal disc of variable size was placed at a prescribed distance directly in front of him at mouth level. He was told that on some trials there would be a target in front of him and on others there would not. He was asked to emit any kind of sound from his mouth which would enable him to detect the presence or absence of the target. The experiments were conducted with procedures and in a laboratory designed to control sensory cues other than those specific to the task. The subject's ability to make such a discrimination was demonstrated by randomly placing a large (12-in. diameter) target 4 to 6 inches in front of his mouth and having him emit a sound. All test subjects quickly acquired a high percentage of correct "yes-no" judgments under these conditions. This procedure served to "set" the subject for the relevant auditory stimuli.

After this was accomplished, the target distance was increased to the first distance at which a minimum-size measure was to be made. The smallest target which evoked a correct "yes" response on 95 to 100 percent of the test trials was then determined at that distance. Once this target size was found, four additional targets were used, each one smaller than the next by a constant area decrement (60 percent). Each of these targets was presented 100 times, plus 100 no-target "catch" trials in random order. The subjects responded "yes" or "no" on each trial. A subject received no knowledge of the accuracy of his performance after training had been completed. The training period included establishment by each subject of a decision criterion limiting false "yes" responses to fewer than 15 percent of the catch trials. When it was apparent that this judgment criterion was established, the test series was begun. Subjects were tested two to three 25- to 30-minute sessions per day.

Results

In Figure 2 the curve showing the mean number of "yes" responses to the targets used in testing early-blind subjects is compared with a curve representing the mean of eight late-blind subjects and eight sighted subjects at three distances.

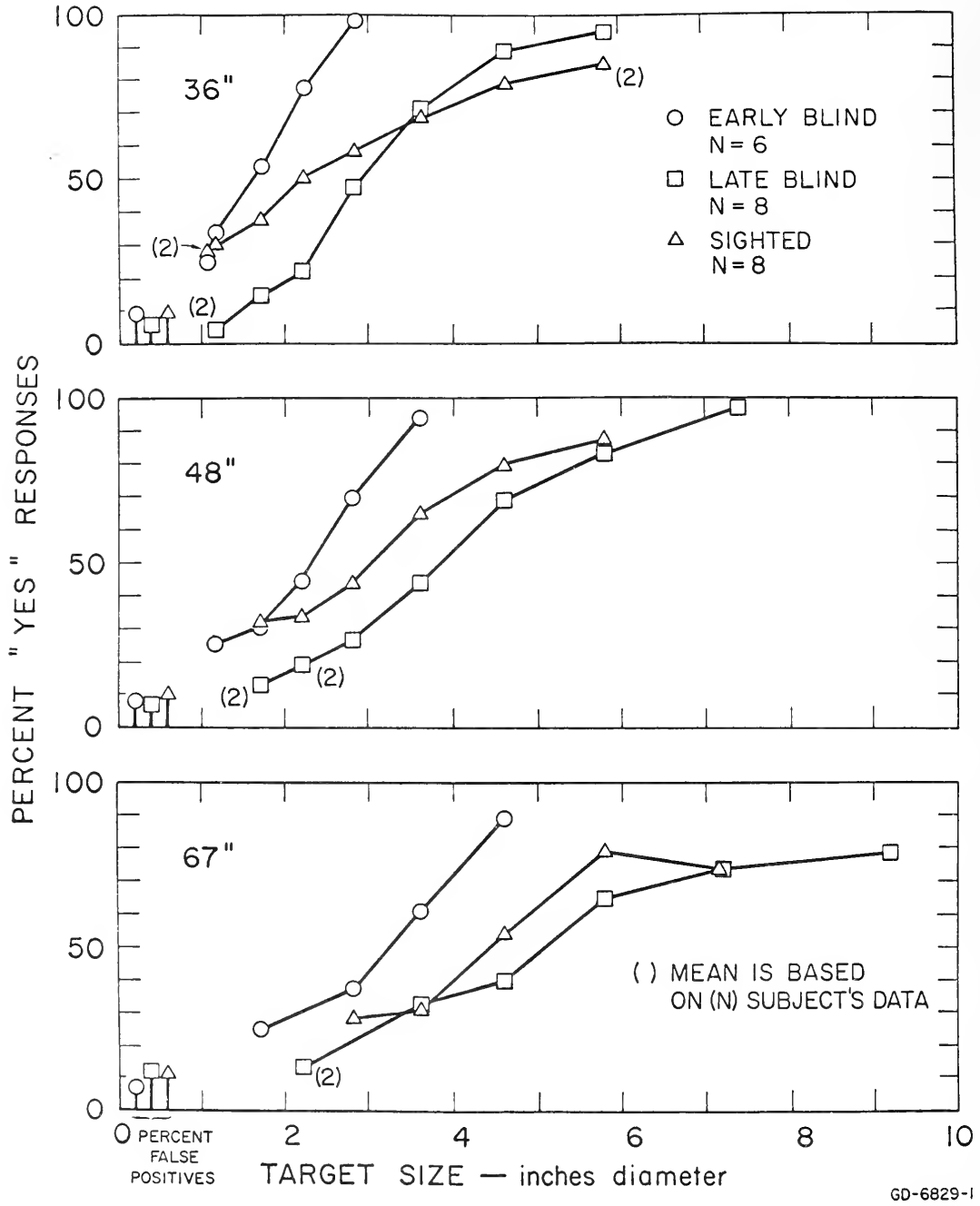

Figure 2. Comparison of Small Target Detection by Early-Blind, Late-Blind, and Sighted Groups

All subjects could not use the same series of target sizes. Therefore each data point in Fig. 2 is based on three or more subjects' data unless otherwise indicated.

Using the probit analysis method, a target size which would yield 50 percent "yes" responses was calculated for each subject at the 36-in. distance. A *t*-test was employed to determine whether there were statistically significant differences in detection of small targets among the three groups and the results appear in the following table:

	df	t	p
Early-blind -- late-blind	12	5.12	<.01
Early-blind -- sighted	12	2.46	<.05
Sighted -- late-blind	14	0.87	>.15

Similar results were obtained at the other distances. In addition to these data, an analysis was made of the number of training trials necessary to reach the target size range at which the minimum-size experiment could begin. Although an error in procedure eliminated the data of one sighted and two late-blind subjects, there was a difference between the early-blind and combined late-blind and sighted groups [t = (17) 2.024, p = <.05] showing significantly fewer training trials were necessary for the early-blind group.

In each case the early-blind subject needed little or no instruction in the initial trials of the task. Most arrived at the ultimate range of target sizes in a few half-hour sessions.

Discussion

There was one significant exception to the early-blind superiority. A sighted subject (SB) is nearly equal to early-blind in ability to detect small targets. She alone has been capable of matching the early-blind on this task. Here, too, training went rapidly, and her performance was much superior to other sighted and early-blind subjects. Figure 3 compares SB's performance with the other sighted subjects and the late-blind group at 36 inches target-to-subject.

These measurements have been replicated annually for two years with subjects who are still available. The intergroup differences still prevail, and each subject remains very close to the original performance level. No subject has improved upon the original asymptotic performance.

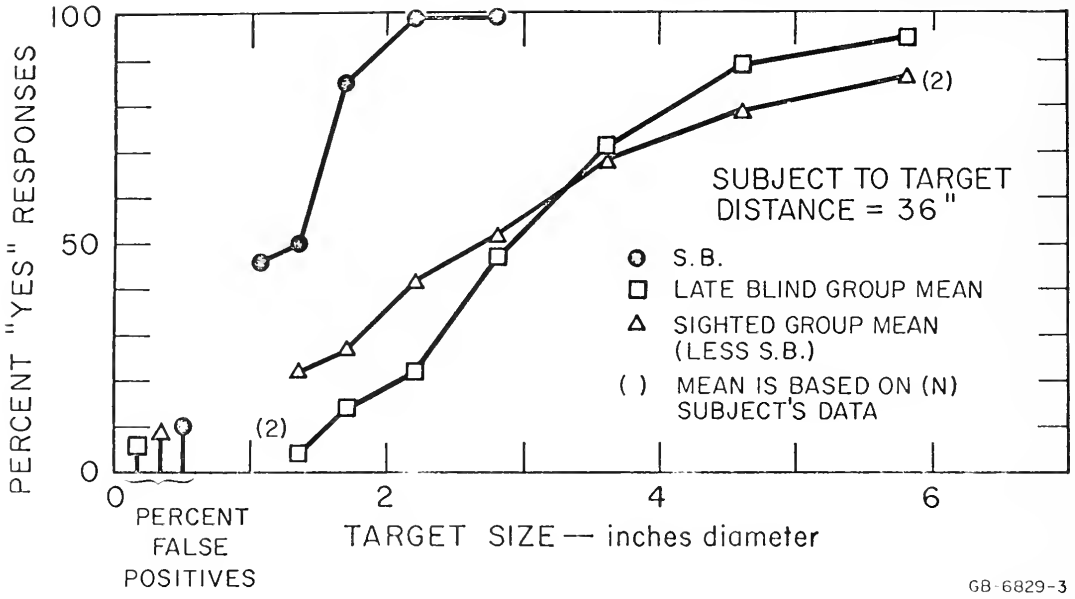

Figure 3. Small Target Detection of Sighted Subject SB Compared to Late-Blind and Sighted Groups

No single kind of signal was emitted by the early-blind group. As with the sighted and late-blind, either a tongue click, hiss sound, or other syllabant was used. Performances of a sample from each group were compared using a uniform electrically generated sound, but no changes in group performances as a function of signal characteristics were indicated (Rice, 1967).

In order to obtain a usable echo from an object, the wavelength of a sound must be small compared to the object. The smaller the wavelength, the higher the frequency of a sound. Excellence in detecting small targets therefore requires good high-frequency hearing. Although no reliable technique for obtaining threshold measures of hearing sensitivity above 8,000 Hz has been developed, a ranking of high-frequency hearing threshold estimates has been obtained for these subjects. This ranking did not reveal systematically superior high-frequency hearing sensitivity in the early-blind subjects or in SB, the sighted subject.

Acoustically the task is one in which a signal is emitted, strikes an object, and returns to the ear prior to cessation of the signal. Apparently the better subjects can detect the relevant parameters of the echo when they are more deeply buried in noise. Kohler (1964) suggests that acuity of difference limens is the key to skill in this task. However, neither

simple absolute sensitivity nor acute differential sensitivity is likely to be a wholly sufficient explanation.

In each subsequent experiment, the early-blind have usually found the task to be relatively easy to learn. They have not excelled at all of these, but have never been inferior to the other groups.

EXPERIMENT II: ECHOLOCALIZATION

Subjects

Subjects were five early-blind, three late-blind, and three sighted subjects from the former experiment. In a study of auditory localization, early-blind subjects were superior to late-blind and sighted subjects.

Procedure

In this task, the subject was seated beneath the center of a vertical axis as shown in Fig. 4. Targets were suspended from an aluminum arm at various axis-to-head distances and at any azimuth position measured from the median plane of the head. In one task the subject was asked to emit his signal straight ahead at 0° while holding his head immobile. Next he was to terminate the sound and move his head so as to point his nose at the center of a target. The subject's head was firmly held in a metal "hat band" which was attached to the axis and calibrated relevant to the 0° position. When the subject moved his head and pointed his nose at where he judged the target to be, a measure of the accuracy of his judgment could be read from the scale. Ten judgments were made at each of 13 target positions, and order of presentation was random. In addition, 10 false positive trials were included in which the target was removed from the field.

Results

Figure 5 shows the relative accuracy of five early-blind, three late-blind, and three sighted subjects on this task over a ±90° (180°) arc with a 6-in. target 36 inches away.

The vertical axis indicates the position subjects judged the middle of the target to be while the horizontal axis represents the true azimuth of the target. Zero degrees is straight ahead. Each data point is the mean judgment for a group and beside each point is the number of subjects whose data was used to calculate the mean. Only subjects who made 50 percent or more localizations at a given azimuth were included. The target diameter was equivalent to 10.2° azimuth.

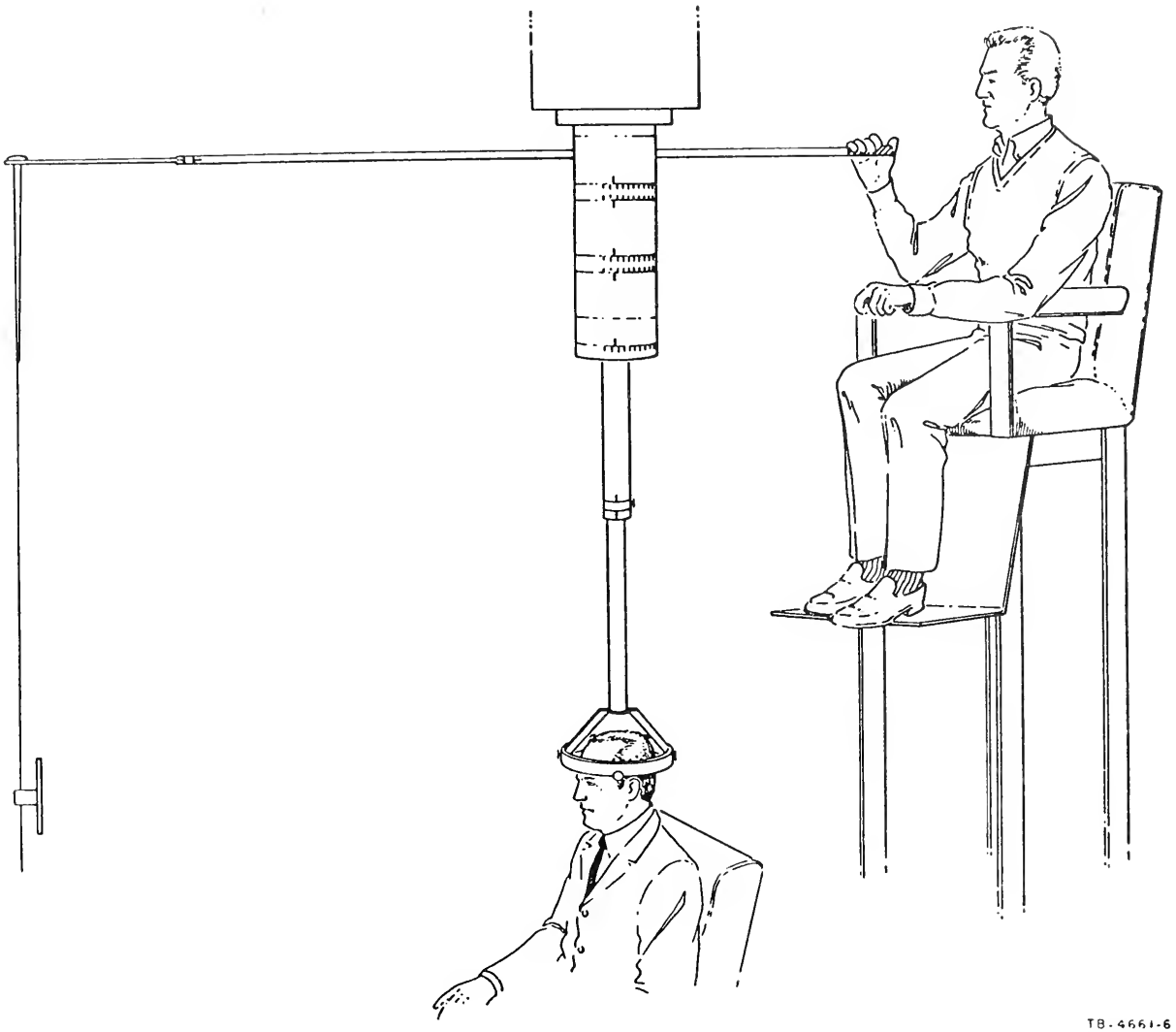

Figure 4. Apparatus for Measuring Echolocalization

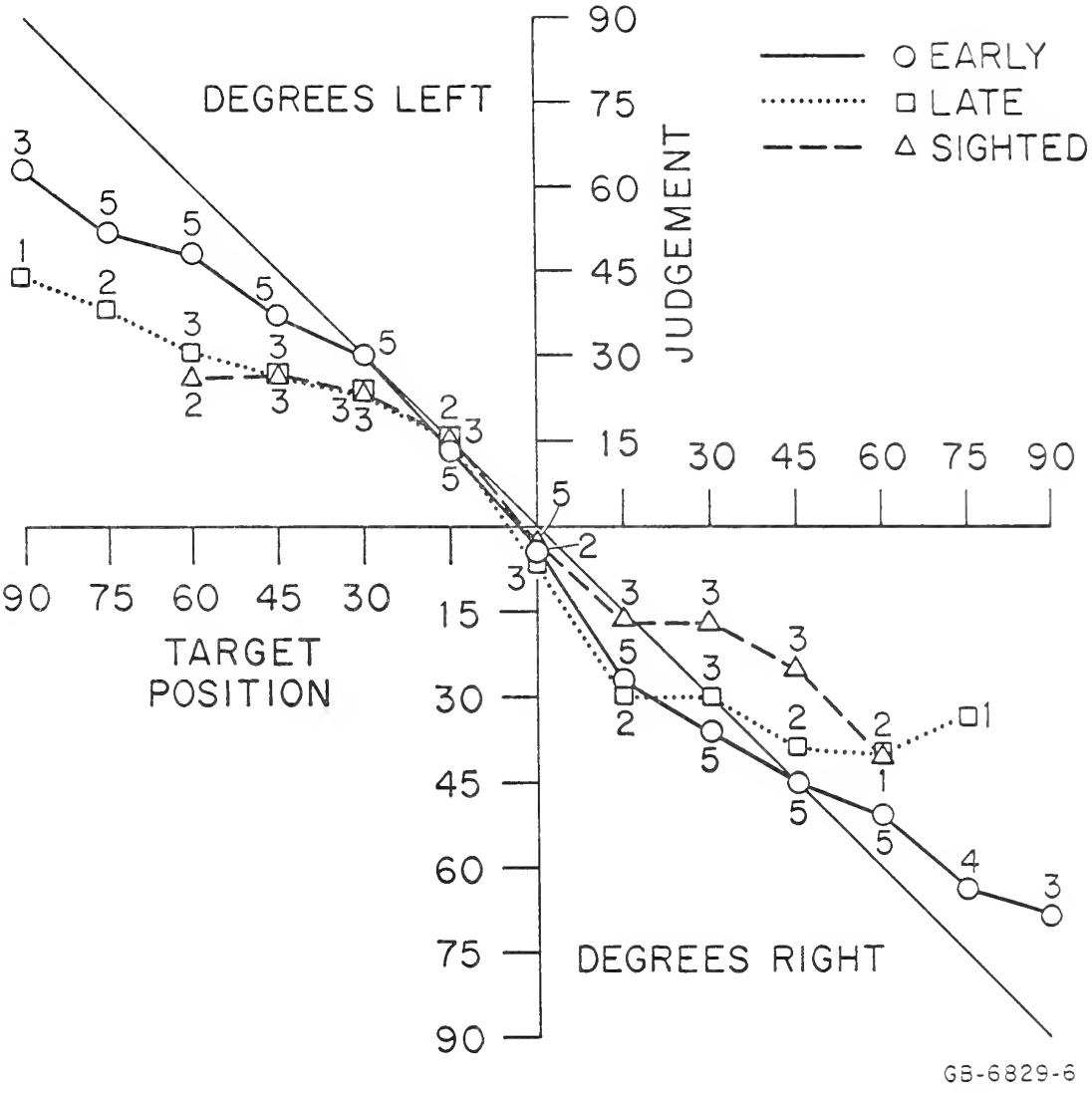

Figure 5. Mean Judgments of Target Azimuth with Respect to True Azimuth for Early-Blind, Late-Blind and Sighted Groups

Discussion

Early-blind subjects were superior both in detection and in locating targets that deviated from straight ahead by 30° or more. It will be noted that as the azimuth increased from 0° the subjects, particularly the late-blind and sighted ones, had increased difficulty in detecting and locating the target, with some failing altogether. The mean percent of false positive judgments for the early-blind group was 2, the late-blind group 10, and the sighted group 48.

In this and similar experiments early-blind subjects appeared to use something like an "auditory glance" in which, for example, they could emit one or two tongue clicks and obtain accurate information as to the presence and location of objects over a wide range of positions and distances.

Others (Seashore and Ling, 1918; Hayes, 1935) have noted a general superiority of blind persons in localization of sound. Although the number of subjects is small, this appears to be demonstrated again in the above task in which late-blind appear to be somewhat better than the sighted. It is reasonable to propose that accuracy may be more affected by learning than in simple detection tasks. However, in this instance, two of the late-blind subjects have been blind longer than the early-blind subjects, but are less skillful.

Tactile Evidence. During the period when these studies were being carried out, Hill and Bliss (in press) were conducting experiments on tactile communication. In some of these experiments JK, the early-blind test subject, was employed. The experimental task was analogous to the visual procedure used by Sperling (1960) to investigate immediate memory in the visual system. The tactile span of immediate memory was measured by presenting subjects with simultaneous point stimuli on some combination of the 24 phalanges of the eight fingers. The subject was asked to report the locations of these stimuli.

In Fig. 6, the performance of JK is compared to the mean of one late-blind and three sighted subjects on one test of tactile immediate memory. In this test the subjects were asked to identify all of the points that were stimulated by a 3 x 8 air jet array. Stimulus duration was 2.5 ms. The number of places stimulated ranged from 2 to 12. The stimulus locations in any given trial were selected randomly by a computer. Thorough statistical analysis of this data has confirmed that JK's performance was consistently superior to that of the other four subjects.

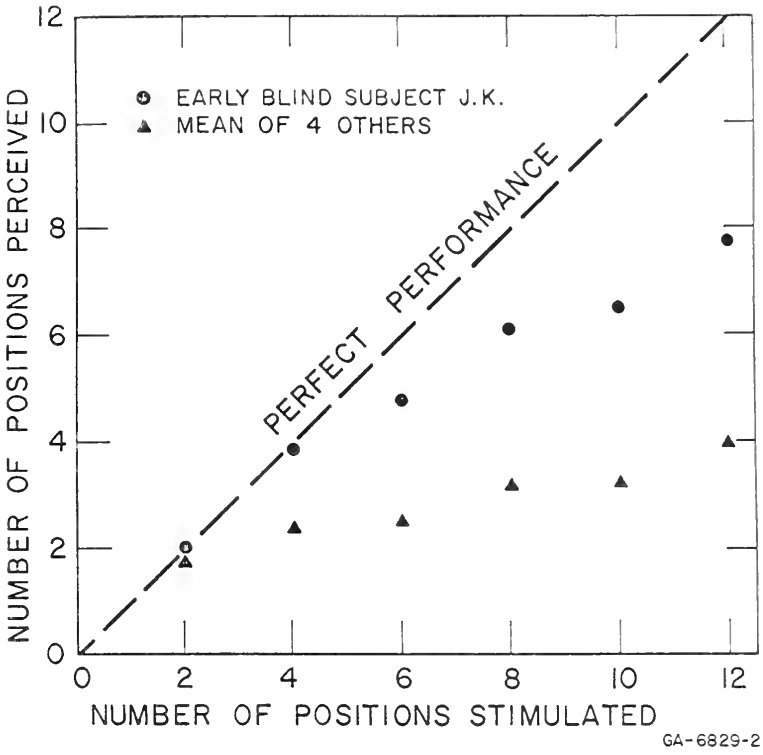

Figure 6. Tactile Immediate Memory of Early-Blind Subject JK Compared to Four Nonearly Blind Subjects

IS IT COMPENSATION?

Axelrod (1959), Hebb (1949), Harlow, Rowland and Griffin (1964), Harlow and Harlow (1966), Spitz (1945), Dennis and Najarian (1957), and others have provided theoretical and empirical background evidence showing the negative consequences of inadequate sensory experience during the early developmental history of animals and man. These effects can be detected by physiological and/or behavioral measures. In studies in which the congenitally blind have been compared to the normally sighted on behavioral tests, the blind have generally not performed as well as the sighted. Thus the history of specific and related research warrants a hypothesis of inferior performance by the congenitally blind.

The results of the experiments reported here found instead that this particular sample of test subjects who have been

blind from infancy demonstrates superior echo perception ability to that of the late-blind and sighted. In addition, at least one of these (JK) has shown superior tactile immediate memory span. Since one sighted subject performed nearly as well as the best early-blind subject in the target detection task, these data cannot be interpreted as supporting a concept of sensory compensation in which the congenitally blind have abilities beyond those possessed by the normal sighted. It is logical to conclude too that blindness alone cannot account for these results, but that variables other than blindness can produce this sensory excellence. We can regard these data as evidence of perceptual enhancement if the difference is looked upon as being manifested in above-average information processing abilities within the distribution of abilities possessed by the normally sighted population. Early blindness therefore may not be the causal variable leading to increased perceptual skills, but may be a correlate which may, under certain conditions, affect the probability that the other modalities will be well developed in their ability to analyze the complex patterned stimuli which impinge upon them.

The concept of "critical periods" seems appropriate to the discussion at this point. A critical period is defined as a hypothetical time interval early in infancy during which stimulation of the sensory modalities is necessary to normal physiological, perceptual, emotional, and social development. Many investigations have indicated that failure to receive this stimulation results in failure of the infant to develop normally, either in the specific deprived modality or in general developmental abnormalities. Some of these studies have shown dramatic effects. Physiologically, Wiesel and Hubel (1965) have shown in kittens that optic neural structures deteriorate and/or fail to develop if the eyes are not provided with adequate stimulation during early life. Riesen (1961) found both physiological and perceptual abnormalities in chimpanzees raised under conditions of visual deprivation. Nissen, Chow, and Semmes (1951) demonstrated haptic perception to be affected by restriction of early tactual experience. Tees (1967), using rats, has shown that auditory pattern-discrimination abilities are decreased if proper acoustic stimulation is absent in infancy. Levine and Mullins (1966) have found that normal emotional development and responsiveness in rats is dependent on adequate stimulation of kinesthetic proprioceptive systems in infancy. Harlow and Harlow (1966) have shown the importance of early tactile contact to social development in rhesus monkeys. And Hebb (1949) has developed a theory of perceptual and intellectual development based on the importance of adequate early stimulation to normalcy. Many of these studies have human analogies under experimental and nonexperimental conditions (Guess, 1966; Casler, 1965).

There are some investigators who report data in support of perceptual enhancement. There is physiological evidence that

suggests that early blindness leads to increased development of the somaesthetic cortex, when neonatal rats are enucleated and raised in an otherwise enriched environment, and concomitant evidence that the visual cortex participates in nonvisual sensory activities (Krech, Rosenzweig, and Bennett, 1963). These authors speculate that this is a compensatory development, but do not report a behavioral measure of enhancement.

Walter, Cohen, Cooper, and Winter (1963) showed that some congenitally blind humans show greater occipital-area EEG activity in response to auditory stimulation than sighted normals, leading to speculation that the occipital area may be serving auditory functions. Walter (1963) also reports that, "among blind children there are some who possess unusual physiological sensitivity to auditory and tactile stimuli and seem easier to educate than others," but cites no controlled studies in support of this observation.

In the study of Forgus (1954) a group of infant rats, whose visual experience was complex, but which was allowed little movement, performed better in a visual discrimination task than a group that was enriched in both visual and tactile proprioceptive experience. Thus when vision was the only sense allowed to receive extensive stimulation, the visual perception of these rats became more prominent than other sensory information channels. There is, then, some evidence for and considerable against some form of perceptual enhancement. I would like to speculate about the apparent paradox.

Stimulation of a specific sense modality in infancy is necessary, but development of perceptual processes goes beyond a mere passive reception of sensory information. Rheingold, Stanley, and Cooley (1962), for example, have shown that variation in visual and auditory stimulation can be used as a reinforcement with infants. Thus the activities related to touching objects or to visual, auditory, and tactile localization of objects can serve as rewarding events for an infant. Rheingold hypothesizes that the reinforcing effect produced by active interaction of infant and environment through the sensory channels leads to increased exploratory activity and thus it could serve as the foundation for development of attention to and perceptual discrimination of the environment. Animal studies by De Nelsky and Denenberg (1967a, 1967b) also emphasize the importance of infant experience on adult visual and tactile exploratory behavior.

The research program of Held and Freedman (1963) supports the notion that the motor activities involved in localizing and contacting the environment are vital to perceptual orientation. Without the afferent-efferent feedback activity of orienting actions, the sensory systems alone do not provide

sufficient information for spatial orientation. Accordingly the blind infant who receives opportunity to interact with a varied tactile and auditory environment will be reinforced by the stimulation provided by this active interaction with his surroundings and is more likely to develop accurate perceptual concepts useful to his spatial orientation and helpful in his mobility. If this interaction occurs and the reinforcement process leads to a strong habit of auditory and tactile exploration of the environment, it is possible that this would lead to abilities that approach an optimal level in these remaining modalities in spite of the loss of vision. It is a logical step further to conceive of the development of acute vigilance to the more subtle auditory or tactile cues such as echoes and thus extract from the physical stimuli a greater proportion of the available information than is normal. Thus "compensation" may be claimed, but optimal development of unaffected modalities seems a more likely hypothesis, given the above conditions. It is not then compensation, but optimization of the information analyzing capabilities of the nonvisual modalities.

Conversely, if the opportunities for early stimulus variation are curtailed, exploratory behavior and perceptual development may be impeded. It is likely that restriction of stimulus variation is significant in a blind child, since there is no haptic visual exploration and parents may protect the child by restricting his active exploration to keep him from danger.

Following this argument, one might expect blind persons who have received the enriched experience and the opportunity to be reinforced (receive feedback) by their environmental surroundings to have developed rather strong habits of attending to and interpreting sounds and touch stimuli. One might also predict that they would be intrepid explorers, curious about their environment, and skillful in getting about using available environmental cues.

In post hoc analysis, this description fits the group of subjects included in the early-blind group. Each is an irrepressible traveler; each shows tactile curiosity (some to a fault); each has demonstrated superior use of echoes; and each can be rated as aggressively independent.

There are other early-blind persons in our vicinity who are peers of our group whom we have not tested. Subjective reports from regional mobility training professionals working in the home and schools indicate that many of these early-blind are retarded in exploratory activity, their orientation skills, and are less adept than their late-blind peers in many ways. Whether they would be less able performers in our echo perception tasks than the original test group of six remains to be

seen. The immobility of this group makes testing them prohibitive at present. In any case, we know that there are many early-blind who are considered severely handicapped or retarded.

This rationale for the superior performance of the early-blind group does not exclude the occurrence of equal skills on the part of sighted persons such as SB. If development of fine auditory perception is dependent on early exposure and response to complex acoustics, there is no reason why a sighted child might not also develop these abilities, given appropriate conditions. It is coincidental that SB's parents report that she was born at home in the winter, on a farm with no electricity, and was kept in a room with shades drawn during her early infancy.

It is of course impossible to trace the early experience of our early-blind subjects. We cannot therefore adequately test our reasoning that specific kinds of stimulation and activity lead to their consistently good performances. However, a testable hypothesis can develop from this rationale. It can be predicted, for example, that if an effort were made to enrich the auditory and tactile experience of a group of congenitally blind and sighted infants by providing varied opportunity to explore tactually a complex environment; to localize sounds by tactile feedback; and to have space in which to develop the use of auditory and haptic spatial cues, these infants would prove superior in perceptual tasks related to auditory and tactile information processing to those not given similar opportunities.

There is at least some empirical support for the notion that supplementary experience for infants who have not received normal stimulation may lead to an increased rate of behavioral development (Sayegh and Dennis, 1965; Casler, 1965). The significance of the findings reported here may lie not so much in showing a possible perceptual enhancement, but in supporting continued investigation of the lasting influence of specific forms of stimulation during infancy. It is also clear that we cannot consider evidence presented here to be proof of an enhancement potential. Much more corroborative data is necessary, particularly other kinds of tests which may get at the hypothesized process in a more efficient and convincing manner.

REFERENCES

Axelrod, S. *Effects of Early Blindness: Performance of Blind and Sighted Children on Tactile and Auditory Tasks.* New York: American Foundation for the Blind, 1959.

Brown, M. S., and Stratton, G. M. "Spatial Threshold of Touch in Blind and Seeing Children," *Journal of Experimental Psychology*, 1925, Vol. 8, pp. 434-42.

Casler, L. "The Effects of Extra Tactile Stimulation on a Group of Institutionalized Infants," *Genet. Psychol. Monogr.*, 1965, Vol. 71, pp. 137-75.

Cherry, C. "Two Ears, But One World," in W. A. Rosenblith (ed.), *Sensory Communications*. New York: Wiley, 1961.

De Nelsky, G. Y., and Denenberg, V. H. "Infantile Stimulation and Adult Exploratory Behavior: Effects of Handling upon Tactual Variation-Seeking," *J. Comp. Physiol. Psychol.*, 1967a, Vol. 63, pp. 309-12.

De Nelsky, G. Y., and Denenberg, V. H. "Infantile Stimulation and Adult Exploratory Behavior in the Rat: Effects of Handling upon Visual Variation-Seeking," *Animal Behavior*, 1967b, Vol. 15, pp. 568-73.

Dennis, W., and Najarian, P. "Infant Development Under Environmental Handicap," *Psychological Monographs*, 1957, Vol. 71, p. 7.

Di Dea, A. "Detection of Obstacles by Blindfolded Persons," *Biological Review*, 1947, Vol. 9, pp. 9-15.

Forgus, R. H. "The Effect of Early Perceptual Learning on the Behavioral Organization of Adult Rats," *J. Comp. Physiol. Psychol.*, 1954, Vol. 47, pp. 331-6.

Guess, D. "The Influence of Visual and Ambulation Restriction on Stereotyped Behavior," *American Journal of Mental Deficiency*, 1966, Vol. 70, pp. 542-47.

Harlow, H. F., Rowland, G. L., and Griffin, G. A. "The Effects of Total Social Deprivation on the Development of Monkey Behavior," *Psychiatric Research Reports*, 1964, Vol. 19, pp. 116-35.

Harlow, H. F., and Harlow, M. "Learning to Love," *American Science*, 1966, Vol. 54, pp. 244-72.

Hayes, S. P. "New Experimental Data on the Old Problem of Sensory Compensation," *The Teachers Forum*, 1933, Vol. 6, pp. 22-6.

Hayes, S. P. "Where Did That Sound Come From?" *The Teachers Forum*, 1935, Vol. 7, pp. 47-51.

Hayes, S. P. *Contributions to a Psychology of Blindness*. New York: American Foundation for the Blind, 1941.

Hebb. D. O. *The Organization of Behavior*. New York: Wiley, 1949.

Held, R., and Freedman, S. J. "Plasticity in Human Sensorimotor Control," *Science*, 1963, Vol. 142, pp. 455-62.

Hill, J. W., and Bliss, J. C. "Modeling in a Tactile Sensory Register," *Perception and Psychophysics* (in press).

Hunter, W. F. "An Analysis of Space Perception in Congenitally Blind and Sighted Individuals," *Journal of Genetic Psychology*, 1964, Vol. 70, pp. 325-9.

Kellogg, W. N. "Sonar System of the Blind," *Science*, 1962, Vol. 137, pp. 399-404.

Kohler, I. "Orientation by Aural Clues," *Research Bulletin* (American Foundation for the Blind), 1964, Vol. 4, pp. 14-53.

Krech, D., Rosenzweig, M., and Bennett, E. "Effects of Complex Environment and Blindness on Rat Brain: An Experiment in Replicate," *Archives of Neurology*, 1963, Vol. 8, pp. 403-12.

Levine, S., and Mullins, R. F. "Hormonal Influences on Brain Organization in Infant Rats," *Science*, 1966, Vol. 152, pp. 1585-92.

Menaker, S. *Perceptual Development in Blind Children*. Unpublished doctoral dissertation, Boston University, 1966.

Nissen, H. W., Chow, K. L., and Semmes, J. "Effects of Restricted Opportunity for Tactual Kinesthetic and Manipulative Experience on the Behavior of a Chimpanzee," *American Journal of Psychology*, 1951, Vol. 64, pp. 485-507.

Rheingold, H. L., Stanley, W. C., and Cooley, J. A. "Method for Studying Exploratory Behavior in Infants," *Science*, 1962, Vol. 136, pp. 1054-55.

Rice, C. E., Feinstein, S. H., and Schusterman, R. J. "Echo Detection Ability of the Blind: Size and Distance Factors," *Journal of Experimental Psychology*, 1965, Vol. 70, pp. 246-51.

Rice, C. E. "Human Echo Perception," *Science*, 1967, Vol. 155, pp. 656-64.

Riesen, A. H. "Stimulation As a Requirement for Growth and Function in Behavioral Development," in D. W. Fiske and S. R. Maddi (eds.), *Functions of Varied Experience*. Homewood, Ill.: Dorsey Press, 1961, pp. 57-80.

Sayegh, Y., and Dennis, W. "The Effect of Supplementary Experiences upon the Behavioral Development of Infants in Institutions," *Child Development*, 1965, Vol. 36, pp. 81-90.

Seashore, C. E., and Ling, T. L. "The Comparative Sensitiveness of Blind and Seeing Persons," *Psychol. Rev. Monogr.*, 1918, Vol. XXV, pp. 148-58.

Sperling, G. "The Information Available in Brief Visual Presentations," *Psychol. Monogr.*, 1960, Vol. 74, p. 11.

Spitz, R. A. "Hospitalism: An Inquiry into the Genesis of Psychiatric Conditions in Early Childhood," *Psychoanalytical Study of the Child*, 1945, Vol. 1, pp. 53-74.

Stellwagen, W., and Culbert, S. "Comparison of Blind and Sighted Subjects on the Discrimination of Texture," *Perceptual and Motor Skills*, 1963, Vol. 17, pp. 61-2.

Supa, M., Cotzin, M., and Dallenbach, K. "'Facial Vision,' The Perception of Obstacles by the Blind," *American Journal of Psychology*, 1944, Vol. 57, pp. 133-83.

Tees, R. C. "The Effects of Early Auditory Restriction in the Rat on Adult Pattern Discrimination," *J. Comp. Physiol. Psychol.*, 1967, Vol. 63, pp. 389-93.

Walter, W. G., Cohen, J., Cooper, R., and Winter, A. "Analysis of Intrinsic Brain Rhythms and Responses Evoked by Visual, Auditory, and Tactile Stimuli in a Group of Congenitally Blind Children," in L. L. Clark (ed.), *Proceedings of the International Congress on Technology and Blindness*. Vol. II; New York: American Foundation for the Blind, 1963, p. 9.

Walter, W. G. "Summary of Panel II," in Clark (ed.), *supra*, p. 312.

Wiesel, T. N., and Hubel, D. H. "Extent of Recovery from the Effects of Visual Deprivation in Kittens," *Journal of Neurophysiology*, 1965, Vol. 28, pp. 1060-72.

HOW TECHNOLOGY WILL SHAPE THE FUTURE*

Emmanuel G. Mesthene

There are two ways, at least, to approach an understanding of how technology will affect the future. One, which I do not adopt here, is to try to predict the most likely technological developments of the future along with their most likely social effects.[1] The other way is to identify some respects in which technology entails change and to suggest the kinds or patterns of change that, by its nature, it brings about in society. It is along the latter lines that I speculate in what follows, restricting myself largely to the contemporary American scene.

NEW TECHNOLOGY MEANS CHANGE

It is widely and ritually repeated these days that a technological world is a world of change. To the extent that this statement is meaningful at all, it would seem to be true only of a world characterized by a more or less continuous development of new technologies. There is no inherent impetus toward change in tools as such, no matter how many or how sophisticated they may be. When new tools emerge and displace older ones, however, there is a strong presumption that there will be changes in nature and in society.

I see no such necessity in the technology-culture or technology-society relationship as we associate with the Marxist tradition, according to which changes in the technology of production are inevitably and univocally determinative of culture and social structure. But I do see, in David Hume's words, a rather "constant conjunction" between technological change and social change as well as a number of good reasons why there should be one, after we discount for the differential time lags that characterize particular cases of social change consequent on the introduction of new technologies.

*This article appeared in *Science*, July 12, 1968, Vol. 161, pp. 135-43.

The author is director of the Harvard University Program on Technology and Society, Cambridge, Massachusetts 02138. This article is based on a chapter from the book, *Environment and Change: The Next Fifty Years*. It is printed by permission of the American Institute of Planners and Indiana University Press.

The traditional Marxist position has been thought of as asserting a strict or hard determinism. By contrast, I would defend a position that William James once called a "soft" determinism, although he used the phrase in a different context. (One may also call it a *probabilistic* determinism and thus avoid the trap of strict causation.) I would hold that the development and adoption of new technologies make for changes in social organization and values by virtue of creating new possibilities for human action and thus altering the mix of options available to men. They may not do so necessarily, but I suggest they do so frequently and with a very high probability.

TECHNOLOGY CREATES NEW POSSIBILITIES

One of the most obvious characteristics of new technology is that it brings about or inhibits changes in *physical* nature, including changes in the patterns of physical objects or processes. By virtue of enhancing our ability to measure and predict, moreover, technology can, more specifically, lead to controlled or directed change. Thus, the plow changes the texture of the soil in a specifiable way; the wheel speeds up the mobility (change in relative position) of people or objects; and the smokebox (or icebox) inhibits some processes of decay. It would be equally accurate to say that these technologies respectively *make possible* changes in soil texture, speed of transport, and so forth.

In these terms, we can define any new (nontrivial) technological change as one which (i) makes possible a new way of inducing a physical change; or (ii) creates a wholly new physical possibility that simply did not exist before. A better mousetrap or faster airplane are examples of new ways and the Salk vaccine or the moon-rocket are instances of new possibilities. Either kind of technological change will extend the range of what man *can* do, which is what technology is all about.

There is nothing in the nature or fact of a new tool, of course, that requires its use. As Lynn White has observed, "a new device merely opens a door; it does not compel one to enter."[2] I would add, however, that a newly opened door does *invite* one to enter.[3] A house in which a number of new doors have been installed is different from what it was before and the behavior of its inhabitants is very likely to change as a result. Possibility as such does not imply actuality (as a strict determinism would have to hold), but there is a high probability of realization of new possibilities that have been deliberately created by technological development, and therefore of change consequent on that realization.

TECHNOLOGY ALTERS THE MIX OF CHOICES

A correlative way in which new technology makes for change is by removing some options previously available. This consequence of technology is derivative, indirect, and more difficult to anticipate than the generation of new options. It is derivative in that old options are removed only after technology has created new ones. It is indirect, analogously, because the removal of options is not the result of the new technology, but of the act of choosing the new options that the technology has created (4). It is more difficult to anticipate, finally, to the degree that the positive consequences *for* which a technology is developed and applied are seen as part of the process of decision to develop and apply, whereas other (often negative) consequences of the development are usually seen only later if at all.

Examples abound. Widespread introduction of modern plumbing can contribute to convenience and to public health, but it also destroys the kind of society that we associate with the village pump. Exploitation of industrial technology removes many of the options and values peculiar to an agricultural society. The automobile and airplane provide mobility, but often at the expense of stabilities and constancies that mobility can disturb.

Opportunity costs are involved in exploiting any opportunity, in other words, and therefore also the opportunities newly created by technology. Insofar as the new options are chosen and the new possibilities are exploited, older possibilities are displaced and older options are precluded or prior choices are reversed. The presumption, albeit not the necessity, that most of the new options will be chosen is therefore at the same time a presumption that the choice will be made to pay the new costs. Thus, whereas technology begins by simply adding to the options available to man, it ends by altering the spectrum of his options and the mix or hierarchy of his social choices.

SOCIAL CHANGE

The first-order effect of technology is thus to multiply and diversify material possibilities and thereby offer new and altered opportunities to man. Different societies committed to different values can react differently (positively or negatively, or simply differently) to the same new possibilities, of course. This is part of the explanation, I believe, for the phenomenon currently being referred to as the "technological gap" between Western Europe and the United States. Moreover, as with all opportunities when badly handled, the ones created by technology can turn into new

handled, the ones created by technology can turn into new opportunities to make mistakes. None of this alters the fact that technology creates opportunity.

Since new possibilities and new opportunities generally require new organizations of human effort to realize and exploit them, technology generally has second-order effects that take the form of social change. There have been instances in which changes in technology and in the material culture of a society have not been accompanied by social change, but such cases are rare and exceptional.[5] More generally:

> ". . . over the millenia cultures in different environments have changed tremendously, and these changes are basically traceable to new adaptations required by changing technology and productive arrangements. Despite occasional cultural barriers, the useful arts have spread extremely widely, and the instances in which they have not been accepted because of pre-existing cultural patterns are insignificant."[6]

While social change does not necessarily follow upon technological change, it almost always does in fact, thus encouraging the presumption that it generally will. The role of the heavy plow in the organization of rural society and that of the stirrup in the rise of feudalism provide fascinating medieval examples of a nearly direct technology-society relationship.[7] The classic case in our ear, of course--which it was Karl Marx's contribution to see so clearly, however badly he clouded his perception and blinded many of his disciples by tying it at once to a rigid determinism and to a form of Hegelian absolutism--is the Industrial Revolution, whose social effects continue to proliferate.

When social change does result from the introduction of a new technology, it must, at least in some of its aspects, be of a sort conducive to exploitation of the new opportunities or possibilities created by that technology. Otherwise it makes no sense even to speak of the social effects of technological change. Social consequences need not be and surely are not uniquely and univocally determined by the character of innovation, but they cannot be entirely independent of that character and still be accounted consequences. (Therein lies the distinction, ultimately, between a hard and soft determinism.) What the advent of nuclear weapons altered was the military organization of the country, not the structure of its communications industry, and the launching of satellites affects international relations much more directly than it does the institutions of organized sport. (A change in international relations may affect international competition in sports, of course, but while everything may be connected with everything else in the last analysis, it is not so in the first.)

There is a congruence between technology and its social effects that serves as intellectual ground for all inquiry into the technology-society relationship. This congruence has two aspects. First, the subset of social changes that can result from a given technological innovation is smaller than the set of all possible social changes and the changes that do in fact result are a still smaller subset of those that can result--that is, they are a sub-subset. In relation to any given innovation, the spectrum of all possible social changes can be divided into those that cannot follow as consequences, those that can (are made possible by the new technology), and those that do (the actual consequences).

It is the congruence of technology and its social consequences in this sense that provides the theoretical warrant for the currently fashionable art of "futurology." The more responsible practitioners of this art insist that they do not predict unique future events but rather identify and assess the likelihood of possible future events or situations. The effort is warranted by the twin facts that technology constantly alters the mix of possibilities and that any given technological change may have several consequences.

The second aspect of the congruence between technology and its social consequences is a certain "one-wayness" about the relationship--that is, the determinative element in it, however "soft." It is after all only technology that creates new *physical* possibilities (though it is not technology *alone* that does so, since science, knowledge, social organization, and other factors are also necessary to the process). To be sure, what technologies will be developed at any particular time is dependent on the social institutions and values that prevail at that particular time. I do not depreciate the interaction between technology and society, especially in our society which is learning to create scientific knowledge to order and develop new technologies for already established purposes. Nevertheless, once a new technology is created, it is the impetus for the social and institutional changes that follow it. This is especially so since a social decision to develop a particular technology is made in the principal expectation of its predicted first-order effects, whereas evaluation of the technology after it is developed and in operation usually takes account also of its less-foreseeable second- and even third-order effects.

The "one-wayness" of the technology-society relationship that I am seeking to identify may be evoked by allusion to the game of dice. The initiative for throwing the dice lies with the player, but the "social" consequences that follow the throw are initiated *by the dice* and depend on how the dice fall. Similarly, the initiative for development of technology in any given instance lies with people, acting individually

or as a public, deliberately or in response to such pressures as wars or revolutions. But the material initiative remains with the technology and the social adaptation to it remains its consequence. Where the analogy is weak, the point is strengthened. For the rules of the game remain the same no matter how the dice fall, but technology has the effect of adding new faces to the dice, thus inducing changes in society's rules so that it can take advantage of the new combinations that are created thereby. That is why new technology generally means change in society as well as in nature.

TECHNOLOGY AND VALUES

New technology also means a high probability of change in individual and social values, because it alters the conditions of choice. It is often customary to distinguish rather sharply between individual and social values and, in another dimension, between tastes or preferences, which are usually taken to be relatively short-term, trivial, and localized, and values, which are seen as higher-level, relatively long-term, and extensive in scope. However useful for some purposes, these distinctions have no standing in logic, as Kenneth Arrow points out:

> "One might want to reserve the term 'values' for a specially elevated or noble set of choices. Perhaps choices in general might be referred to as 'tastes.' We do not ordinarily think of the preference for additional bread over additional beer as being a value worthy of philosophic inquiry. I believe, though, that the distinction cannot be made logically. . . ."[8]

The *logical* equivalence of preferences and values, whether individual or social, derives from the fact that all of them are rooted in choice behavior. If values be taken in the contemporary American sociologist's sense of broad dominant commitments that account for the cohesion of a society and the maintenance of its identity through time, their relation to choice can be seen both in their genesis (historically in the society, not psychologically in the individual) and in their exemplification (where they function as criteria for choice).

Since values in this sense are rather high-level abstractions, it is unlikely that technological change can be seen to influence them directly. We need, rather, to explore what difference technology makes for the choice behaviors that the values are abstractions from.

What we choose, whether individually or as a society (in whatever sense a society may be said to choose, by public action or by resultant of private actions) is limited, at any given time, by the options available. (Preferences and values are in this respect different from aspirations or ideals in that the latter can attach to imaginative constructs. To confuse the two is to confuse morality and fantasy.) When we say that technology makes possible what was not possible before, we say that we now have more options to choose from than we did before. Our old value clusters, whose hierarchical ordering was determined in the sense of being delimited by antecedent conditions of material possibility, are thus now subject to change because technology has altered the material conditions.

By making available new options, new technology can, and generally will, lead to a restructuring of the hierarchy of values, either by providing the means for bringing previously unattainable ideals within the realm of choice and therefore of realizable values, or by altering the relative ease with which different values can be implemented--that is, by changing the costs associated with realizing them. Thus, the economic affluence that technological advance can bring may enhance the values we associate with leisure at the relative expense of the value of work and achievement, and the development of pain-killing and pleasure-producing drugs can make the value of material comfort relatively easier of achievement than the values we associate with maintaining a stiff upper lip during pain or adversity.

One may argue further that technological change leads to value change of a particular sort in exact analogy to the subset of possible social changes that a new technology may augur (as distinct from both the wider set that includes the impossible and the narrower, actual subset). There are two reasons for this. First, certain attitudes and values are more conducive than others to most effective exploitation of the potentialities of new tools or technologies. Choice behavior must be somehow attuned to the new options that technology creates, so that they will in fact be chosen. Thus, to transfer or adapt industrial technologies to underdeveloped nations is only part of the problem of economic development; the more important part consists in altering value predispositions and attitudes so that the technologies can flourish. In more advanced societies, such as ours, people who hold values well adapted to exploitation of major new technologies will tend to grow rich and occupy elite positions in society, thus serving to reinforce those same values in the society at large.

Second, whereas technological choices will be made according to the values prevailing in society at any given time,

those choices will, as previously noted, be based on the foreseeable consequences of the new technology. The essence of technology as creative of new possibility, however, means that there is an irreducible element of uncertainty--of unforeseeable consequence--in any innovation.[9] Techniques of the class of systems analysis are designed to anticipate as much of this uncertainty as possible, but it is in the nature of the case that they can never be more than partially successful, partly because a new technology will enter into interaction with a growing number and variety of ongoing processes as societies become more complex, and partly--at least in democratic societies--because the unforeseeable consequences of technological innovation may take the form of negative *political* reaction by certain groups in the society.

Since there is an irreducible element of uncertainty that attends every case of technological innovation, therefore, there is need for two evaluations: one before and one after the innovation. The first is an evaluation of prospects (of ends-in-view, as John Dewey called them). The second is an evaluation of results (of outcomes actually attained).[10] The uncertainty inherent in technological innovation means there will usually be a difference between the results of these two evaluations. To that extent, new technology will lead to value change.

CONTEMPORARY PATTERNS OF CHANGE

Our own age is characterized by a deliberate fostering of technological change and, in general, by the growing social role of knowledge. "Every society now lives by innovation and growth; and it is theoretical knowledge that has become the matrix of innovation."[11,12]

In a modern industrialized society, particularly, there are a number of pressures that conspire toward this result. First, economic pressures argue for the greater efficiency implicit in a new technology. The principal example of this is the continuing process of capital modernization in industry. Second, there are political pressures that seek the greater absolute effectiveness of a new technology, as in our latest weapons, for example. Third, we turn more and more to the promise of new technology for help in dealing with our social problems. Fourth, there is the spur to action inherent in the mere availability of a technology: space vehicles spawn moon programs. Finally, political and industrial interests engaged in developing a new technology have the vested interest and powerful means needed to urge its adoption and widespread use irrespective of social utility.

If this social drive to develop ever more new technology is taken in conjunction with the very high probability that new technology will result in physical, social, and value changes, we have the conditions for a world whose defining characteristic is change, the kind of world I once described as Heraclitean, after the pre-Socratic philosopher Heraclitus, who saw change as the essence of being.[13]

When change becomes that pervasive in the world, it must color the ways in which we understand, organize, and evaluate the world. The sheer fact of change will have an impact on our sensibilities and ideas, our institutions and practices, our politics and values. Most of these have to date developed on the assumption that stability is more characteristic of the world than change--that is, that change is but a temporary perturbation of stability or a transition to a new (and presumed better or higher) stable state. What happens to them when that fundamental metaphysical assumption is undermined? The answer is implicit in a number of intellectual, social, and political trends in present-day American society.

INTELLECTUAL TRENDS

I have already noted the growing social role of knowledge.[14] Our society values the production and inculcation of knowledge more than ever before, as is evidenced by sharply rising research, development, and education expenditures over the last 20 years. There is an increasing devotion, too, to the systematic use of information in public and private decision-making, as is exemplified by the President's Council of Economic Advisers, by various scientific advisory groups in and out of government, by the growing number of research and analysis organizations, by increasing appeal to such techniques as program planning and budgeting, and by the recent concern with assembling and analyzing a set of "social indicators" to help gauge the social health of the nation.[15]

A changing society must put a relatively strong accent on knowledge in order to offset the unfamiliarity and uncertainty that change implies. Traditional ways (beliefs, institutions, procedures, attitudes) may be adequate for dealing with the existent and known. But new technology can be generated and assimilated only if there is technical knowledge about its operation and capabilities, and economic, sociological, and political knowledge about the society into which it will be introduced.

This argues, in turn, for the importance of the social sciences. It is by now reasonably well established that policymaking in many areas can be effective only if it takes

account of the findings and potentialities of the natural sciences and of their associated technologies. Starting with economics, we are gradually coming to a similar recognition of the importance of the social sciences to public policy. Research and education in the social sciences are being increasingly supported by public funds, as the natural sciences have been by the military services and the National Science Foundation for the last quarter of a century. Also, both policy-makers and social scientists are seeking new mechanisms of cooperation and are exploring the modifications these will require in their respective assumptions and procedures. This trend toward more applied social science is likely to be noticeable in any highly innovative society.

The scientific mores of such a society will also be influenced by the interest in applying technology that defines it. Inquiry is likely to be motivated by and focused on problems of the society rather than centering mainly around the unsolved puzzles of the scientific disciplines themselves. This does not mean, although it can, if vigilance against political interference is relaxed, (i) that the resulting science will be any less pure than that proceeding from disinterested curiosity, or (ii) that there cannot therefore be any science motivated by curiosity, or (iii) that the advancement of scientific knowledge may not be dependent on there always being some. The research into the atomic structure of matter that is undertaken in the interest of developing new materials for supersonic flight is no less basic or pure than the same research undertaken in pursuit of a new and intriguing particle, even though the research strategy may be different in the two cases. Even more to the point, social research into voting behavior is not *ipso facto* less basic or pure because it is paid for by an aspiring candidate rather than by a foundation grant.

There is a serious question, in any event, about just how pure is pure in scientific research. One need not subscribe to such an out-and-out Marxism as Hessen's postulation of exclusively social and economic origins for Newton's research interests, for example, in order to recognize "the demonstrable fact that the thematics of science in seventeenth century England were in large part determined by the social structure of the time."[16] Nor should we ignore the fashions in science, such as the strong emphasis on physics in recent years that was triggered by the military interest in physics-based technologies, or the very similar present-day passion for computers and computer science. An innovative society is one in which there is a strong interest in bringing the best available knowledge to bear on ameliorating society's problems and on taking advantage of its opportunities. It is not surprising that scientific objectives and

choices in that society should be in large measure determined by what those problems and opportunities are, which does not mean, however, that scientific objectives are identical with or must remain tied to social objectives.

Another way in which a society of change influences its patterns of inquiry is by putting a premium on the formulation of new questions and, in general, on the synthetic aspects of knowing. Such a society is by description one that probes at scientific and intellectual frontiers, and a scientific frontier, according to the biologist C. H. Waddington, is where "we encounter problems about which we cannot yet ask sensible questions."[17] When change is prevalent, in other words, we are frequently in the position of not knowing just what we need to know. A goodly portion of the society's intellectual effort must then be devoted to formulating new research questions or reformulating old ones in the light of changed circumstances and needs so that inquiry can remain pertinent to the social problems that knowledge can alleviate.

Three consequences follow. First, there is a need to reexamine the knowledge already available for its meaning in the context of the new questions. This is the synthetic aspect of knowing. Second, the need to formulate new questions coupled with the problem-orientation, as distinct from the discipline-orientation, discussed above requires that answers be sought from the intersection of several disciplines. This is the impetus for current emphases on the importance of interdisciplinary or cross-disciplinary inquiry as a supplement to the academic research aimed at expanding knowledge and training scientists. Third, there is a need for further institutionalization of the function of transferring scientific knowledge to social use. This process, which began in the late 19th century with the creation of large central research laboratories in the chemical, electrical, and communications industries, now sees universities spawning problem- or area-oriented institutes, which surely augur eventual organizational change, and new policy-oriented research organizations arising at the borderlines of industry, government, and universities, and in a new no-man's land between the public and private sectors of our society.

A fundamental intellectual implication of a world of change is the greater theoretical utility of the concept of process over that of structure in sociological and cultural analysis. Equilibrium theories of various sorts imply ascription of greater reality to stable sociocultural patterns than to social change. But as the anthropologist Evon Vogt argues,

> "change is basic in social and cultural systems. . . Leach [E. R.] is fundamentally correct when he states that 'every real society is a process in time.' Our problem

becomes one of describing, conceptualizing, and explaining a set of ongoing processes. . . ,

but none of the current approaches is satisfactory "in providing a set of conceptual tools for the description and analysis of the *changing* social and cultural *systems* that we observe."[18]

There is no denial of structure: "Once the processes are understood, the structures manifested at given time-points will emerge with even greater clarity," and Vogt goes on to distinguish between short-run "recurrent processes" and long-range and cumulative "directional processes." The former are the repetitive "structural dynamics" of a society. The latter "involve alterations in the structures of social and cultural systems."[18] It is clear that the latter, for Vogt, are more revelatory of the essence of culture and society as changing.[19]

SOCIAL TRENDS

Heraclitus' philosophy of universal change was a generalization from his observation of physical nature, as is evident from his appeal to the four elements of ancient physics (fire, earth, water, and air) in support of it.[20] Yet he offered it as a metaphysical generalization. Change, flux, is the essential characteristic of all of existence, not of matter only. We should expect to find it central also, therefore, to societies, institutions, values, population patterns, and personal careers.

We do. Among the effects of technological change that we are beginning to understand fairly well even now are those (i) on our principal institutions: industry, government, universities; (ii) on our production processes and occupational patterns; and (iii) on our social and individual environment: our values, educational requirements, group affiliations, physical locations, and personal identities. All of these are in movement. Most are also in process; that is, there is direction or pattern to the changes they are undergoing, and the direction is moreoever recognizable as a consequence of the growing social role of knowledge induced by proliferation of new technology.

It used to be that industry, government, and universities operated almost independently of one another. They no longer do, because technical knowledge is increasingly necessary to the successful operation of industry and government, and because universities, as the principal sources and repositories of knowledge, find that they are adding a dimension of social service to their traditional roles of research

and teaching. This conclusion is supported (i) by the growing importance of research, development, and systematic planning in industry; (ii) by the proliferation and growth of knowledge-based industries; (iii) by the changing role of the executive, who increasingly performs sifting, rearranging, and decision operations on ideas that are generated and come to him from below; (iv) by the entry of technical experts into policy-making at all levels of government; (v) by the increasing dependence of effective government on availability of information and analysis of data; (vi) by the importance of education and training to successful entry into the society and to maintenance of economic growth; and (vii) by the growth, not only of problem-oriented activities on university campuses, but also of the social role (as consultants, advisory boards, and so forth) of university faculties.

The economic affluence that is generated by modern industrial technology accelerates such institutional mixing-up by blurring the heretofore relatively clear distinction between the private and public sectors of society. Some societies, like the Scandinavian, can put a strong emphasis on the acquisition of public or social goods even in the absence of a highly productive economy. In our society, affluence is a precondition of such an emphasis. Thus, as we dispose increasingly of resources not required for production of traditional consumer goods and services, they tend to be devoted to providing such public goods as education, urban improvement, clean air, and so forth.

What is more, goods and services once considered private more and more move into the public sector, as in scientific research and graduate education or the delivery of medical care. As we thus "socialize" an increasing number of goods once considered private, however, we tend also to farm out their procurement to private institutions, through such devices as government grants and contracts. As a result,

> ". . . our national policy assumes that a great deal of our new enterprise is likely to follow from technological developments financed by the government and directed in response to government policy; and many of our most dynamic industries are largely or entirely dependent on doing business with the government through a subordinate relationship that has little resemblance to the traditional market economy."[21]

Another observer says:

> "Increasingly it will be recognized that the mature corporation, as it develops, becomes part of the larger

administrative complex associated with the state. In time the line between the two will disappear."[22]

This fluidity of institutions and social sectors is not unreminiscent of the more literal fluidity that Heraclitus immortalized: "You cannot step twice into the same river, for other waters are continually flowing on."[20] But also like the waters of a river, the institutional changes of a technologically active age are not aimless; they have direction, as noted, toward an enhancement of the use of knowledge in society:

> "Perhaps it is not too much to say that if the business firm was the key institution of the past hundred years, because of its role in organizing production for the mass creation of products, the university will become the central institution of the next hundred years because of its role as the new *(sic)* source of innovation and knowledge."[11]

One should recall, in this connection, that the university is the portal through which more and more people enter into productive roles in society and that it increasingly provides the training necessary for leadership in business and government as well as in education.

The considerable debate of the last few years about the implications of technological change for employment and the character of work has not been in vain. Positions originally so extreme as to be untenable have been tempered in the process. Few serious students of the subject believe any longer that the progress of mechanization and automation in industry must lead to an irreversible increase in the level of *involuntary* unemployment in the society, whether in the form of unavailability of employment, or a shortening work week, or of lengthening vacations, or of an extension of the period of formal schooling. These developments may occur, either voluntarily, because people choose to take some of their increased productivity in the form of leisure, or as a result of inadequate education, poor social management, or failure to ameliorate our race problem. But reduction of the overall level of employment is not a necessary consequence of new industrial technology.

Too much is beginning to be known about what the effects of technology on work and employment in fact are, on the other hand, for them to be adequately dealt with as merely transitional disruptions consequent on industrialization. A number of economists are therefore beginning to move away from explanation in terms of transition (which is typical of traditional equilibrium theory) to multi-level "steady state" models, or to dynamic theories of one sort or another, as more adequate to capturing the reality of constant change in the economy.[23]

The fact is that technological development has provided substitutes for human muscle power and mechanical skills for most of history. Developments in electronic computers are providing mechanical substitutes for at least some human mental operations. No technology as yet promises to duplicate human creativity, especially in the artistic sense, if only because we do not yet understand the conditions and functioning of creativity. (This is not to deny that computers can be useful aids to creative activity.) Nor are there in the offing mechanical equivalents for the initiatives inherent in human emotions, although emotions can of course be affected and modified by drugs or electrical means. For the foreseeable future, therefore, one may hazard the prediction that distinctively human work will be less and less of the "muscle and elementary mental" kind, and much more and more of the "intellectual, artistic, and emotional" kind. (This need *not* mean that only highly inventive or artistic people will be employable in the future. There is much sympathy needed in the world, for example, and the provision of it is neither mechanizable nor requisite of genius. It is illustrative of what I think of as an "emotional" service.)

While advancing technology may not displace people by reducing employment in the aggregate, therefore, it unquestionably displaces some jobs by rendering them more efficiently performed by machines than by people. There devolves on the society, as a result, a major responsibility for inventing and adopting mechanisms and procedures of occupational innovation. These may range from financial and organizational innovations for diverting resources to neglected public needs to social policies which no longer treat human labor as a market commodity. Whatever the form of solution, however, the problem is more than a "transitional" one. It represents a qualitative and permanent alteration in the nature of human society consequent on perception of the ubiquity of change.

This perception and the anticipatory attitude that it implies have some additional consequences, which are not less important but are as yet less well understood even than those for institutional change and occupational patterns. For example, lifetime constancy of trade or profession has been a basis of personal identity and of the sense of individuality. Other bases for this same sense have been identification over time with a particular social group or set of groups as well as with physical or geographical location.

All of these are now subject to Heraclitean flux. The incidence of life-long careers will inevitably lessen, as employing institutions and job contents both change. More than one career per lifetime is likely to be the norm henceforth. Group identities will shift as a result. every

occupational change will involve the individual with new professional colleagues, and will often mean a sundering from old friends and cultivation of new ones. Increasing geographical mobility (already so characteristic of advanced industrial society) will not only reinforce these impermanencies, but also shake the sense of identity traditionally associated with ownership and residence upon a piece of land. Even the family will lose influence as a bastion of personality, as its loss of economic *raison d'etre* is supplemented by a weakening of its educational and socializing functions and even of its prestige as the unit of reproduction.[24]

I have alluded elsewhere to the implications for education of a world seen as essentially changing.[13] Education has traditionally had the function of preparing youth to assume full membership in society (i) by imparting a sense for the history and accumulated knowledge of the race, (ii) by imbuing the young with a sense of the culture, mores, practices, and values of the group, and (iii) by teaching a skill or set of skills necessary to a productive social role. Philosophies of education have accordingly been elaborated on the assumption of stability of values and mores, and on the up-to-now demonstrable principle that one good set of skills well learned could serve a man through a productive lifetime.

This principle is undermined by contemporary and foreseeable occupational trends, and the burden of my general argument similarly disputes the assumption of unalterable cultural stabilities. There are significant implications for the enterprise of education. They include, (i) a decline in the importance of manual skills, (ii) a consequent rising emphasis on general techniques of analysis and evaluation of alternatives, (iii) training in occupational flexibility, (iv) development of management skills, and (v) instruction in the potentialities and use of modern intellectual tools. The major problem of contemporary education at the primary and secondary levels is that the educational establishment is by and large unprepared, unequipped, and poorly organized to provide education consonant with these realities.

Above all, perhaps, higher education especially will need to attend more deliberately and systematically than it has in recent decades to developing the reflective synthetic, speculative, and even the contemplative capacities of men, for understanding may be at a relatively greater premium henceforth than particular knowledge. When we can no longer lean on the world's stabilities, we must be able to rely on new abilities to cope with change and be comfortable with it.

There is an analogous implication for social values and for the human enterprise of valuing. There is concern expressed in many quarters these days about the threat of technology to values. Some writers go so far as to assert an

incompatibility between technology and values and to warn that technological progress is tantamount to dehumanization and the destruction of all value.[25]

There is no question, as noted earlier, that technological change alters the mix of choices available to man and that choices made ipso facto preclude other choices that might have been made. Some values are destroyed in this process, which can thus involve punishing traumata of adjustment that it would be immoral to ignore. It is also unquestionably the case that some of the choices made are constrained by the very technology that makes them available. In such cases, the loss of value can be tragic, and justly regretted and inveighed against. It is in the hope of anticipating such developments that we are currently investigating means to assess and control technological development in the public interest.

On the other hand, I find no justification for the contention that technological progress must of necessity mean a progressive destruction of value. Such fears seem rather to be based partly on psychological resistance to change and partly on a currently fashionable literary mythology that interprets as a loss the fact that the average man today does not share the values that were characteristic of some tiny elites centuries ago. To the extent that it is more than that, this contention is based, I think, on a fundamental misunderstanding of the nature of value.

The values of a society change more slowly, to be sure, than the realities of human experience; their persistence is inherent in their emergence as values in the first place and in their function as criteria, which means that their adequacy will tend to be judged later rather than earlier. But values do change, as a glance at any history will show. They change more quickly, moreover, the more quickly or extensively a society develops and introduces new technology. Since technological change is so prominent a characteristic of our own society, we tend to note inadequacies in our received values more quickly than might have been the case in other times. When that perception is coupled with the conviction of some that technology and value are inherently inimical to each other, the opinion is reinforced that the advance of technology must mean the decline of value and of the amenities of distinctively human civilization.

While particular values may vary with particular times and particular societies, however, the activity of valuing and the social function of values do not change. That is the source of the stability so necessary to human moral experience. It is not to be found, nor should it be sought, exclusively in the familiar values of the past. As the world and society are seen increasingly as processes in constant

change under the impact of new technology, value analysis will have to concentrate on process, too: on the process of valuation in the individual and on the process of value formation and value change in the society. The emphasis will have to shift, in other words, from values to valuing. For it is not particular familiar values as such that are valuable, but the human ability to extract values from experience and to use and cherish them. And that value is not threatened by technology; it is only challenged by it to remain adequate to human experience by guiding us in the reformulation of our ends to fit our new means and opportunities.

POLITICAL TRENDS

There are a number of respects in which technological change and the intellectual and social changes it brings with it are likely to alter the conditions and patterns of government. I construe government in this connection in the broadest possible sense of the term, as governance (with a small "g") of a *polity*. Better yet, I take the word as equivalent to governing, since the participle helps to banish both visions of statism and connotations of public officialdom. What I seek to encompass by the term, in other words, is the social decision-making function in general, whether exemplified by small or large or public or private groups. I include in decision-making, moreover, both the values and criteria that govern it and the institutions, mechanisms, procedures, and information by means of which it operates.

One notes that, as in other social sectors and institutions, the changes that technology purports for government are of a determinate sort--they have direction: they enhance the role of government in society and they enhance the role of knowledge in government.

The importance of decision-making will tend to grow relative to other social functions (relative to production, for example, in an affluent society): (i) partly because the frequency with which new possibilities are created in a technologically active age will provide many opportunities for new choices, (ii) partly because continuing alteration of the spectrum of available choice alternatives will shorten the useful life of decisions previously made, (iii) partly because decisions in areas previously thought to be unrelated are increasingly found to impinge on and alter each other, and (iv) partly because the economic affluence consequent on new technology will increase the scope of deliberate public decision-making at the expense, relatively, of the largely automatic and private charting of society's course by

market forces. It is characteristic of our time that the market is increasingly distrusted as a goal-setting mechanism for society, although there is of course no question of its effectiveness as a signaling and controlling device for the formulation of economic policy.

Some of the ways in which knowledge increasingly enters the fabric of government have been amply noted, both above and in what is by now becoming fairly voluminous literature on various aspects of the relation of science and public policy.[26] There are other ways, in addition, in which knowledge (information, technology, science) is bound to have fundamental impacts on the structures and processes of decision-making that we as yet know little about.

The newest information-handling equipments and techniques find their way quickly into the agencies of federal and local government and into the operations of industrial organizations, because there are many jobs that they can perform more efficiently than the traditional rows of clerks. But it is notorious that adopting new means in order to better accomplish old ends very often results in the substitution of new ends for old ones.[27] Computers and associated intellectual tools can thus, for example, make our public decisions more informed, efficient, and rational, and less subject to lethargy, partisanship, and ignorance. Yet that possibility seems to imply a degree of expertise and sophistication of policy-making and implementing procedures that may leave the public forever ill-informed, blur the lines between executive and legislature (and private bureaucracies) as all increasingly rely on the same experts and sources of information, and chase the idea of federalism into the history books close on the heels of the public-private separation.

There is in general the problem of what happens to traditional relationships between citizens and government, to such prerogatives of the individual as personal privacy, electoral consent, and access to the independent social criticism of the press, and to the ethics of and public controls over a new elite of information keepers, when economic, military, and social policies become increasingly technical, long-range, machine-processed, information-based, and expert-dominated.

An exciting possibility that is however so dimly seen as perhaps to be illusory is that knowledge can widen the area of political consensus. There is no question here of a naive rationalism such as we associate with the 18th-century enlightenment. No amount of reason will ever triumph wholly over irrationality, certainly, nor will vested interest fully yield to love of wisdom. Yet there are some political disputes

and disagreements, surely, that derive from ignorance of information bearing on an issue or from lack of the means to analyze fully the probable consequences of alternative courses of action. Is it too much to expect that better knowledge may bring about greater political consensus in such cases as these? Is the democratic tenet that an informed public contributes to the commonweal pure political myth? The sociologist S. M. Lipset suggests not:

> "Insofar as most organized participants in the political struggle accept the authority of experts in economics, military affairs, interpretations of the behavior of foreign nations and the like, it becomes increasingly difficult to challenge the views of opponents in moralistic 'either/or' terms. Where there is some consensus among the scientific experts on specific issues, these tend to be removed as possible sources of intense controversy.[28]

Robert E. Lane of Yale has made the point more generally:

> "If we employ the term 'ideology' to mean a comprehensive, passionately believed, self-activating view of society, usually organized as a social movement. . . it makes sense to think of a domain of knowledge distinguishable from a domain of ideology, despite the extent to which they may overlap. Since knowledge and ideology serve somewhat as functional equivalents in orienting a person toward the problems he must face and the policies he must select, the growth of the domain of knowledge causes it to impinge on the domain of ideology."[12]

Harvey Brooks, finally, draws a similar conclusion from consideration of the extent to which scientific criteria and techniques have found their way into the management of political affairs. He finds an

> ". . . increasing relegation of questions which used to be matters of political debate to professional cadres of technicians and experts which function almost independently of the democratic political process. . . . The progress which is achieved, while slower, seems more solid, more irreversible, more capable of enlisting a wide consensus."[29]

I raise this point as fundamental to the technology-polity relationship, not by way of hazarding a prediction. I ignore neither the possibility that *value* conflicts in political debate may become sharper still as factual differences are muted by better knowledge, nor the fact that decline of political ideology does not *ipso facto* mean a decline of political disagreement, nor the fear of some that the hippie movement, literary anti-intellectualism, and people's fears of genuine dangers implicit in continued

technological advance may in fact augur an imminent retreat from rationality and an interlude--perhaps a long interlude--either of political know-nothingism reminiscent of Joseph McCarthy or of social concentration on contemplative or religious values.

Yet, if the technology-values dualism is unwarranted, as I argued above, it is equally plausible to find no more warrant in principle in a sharp separation between knowledge and political action. Like all dualisms, this one too may have had its origins in the analytic abhorrence of uncertainty. (One is reminded in this connection of the radical dualism that Descartes arrived at as a result of his determination to base his philosophy on the only certain and self-evident principle he could discover.) There certainly is painfully much in political history and political experience to render uncertain a positive correlation between knowledge and political consensus. The correlation is not necessarily absent, therefore, and to find it and lead society to act on it may be the greatest challenge yet to political inquiry and political action.

To the extent that technological change expands and alters the spectrum of what man can do, it multiplies the choices that society will have to make. These choices will increasingly have to be deliberate social choices, moreover, rather than market reflections of innumerable individual consumer choices, and will therefore have to be made by political means. Since it is unlikely--despite futurists and technological forecasters--that we will soon be able to predict future opportunities (and their attendant opportunity costs) with any significant degree of reliability in detail, it becomes important to investigate the conditions of a political system (I use the term in the wide sense I assigned to "government" above) with the flexibility and value presuppositions necessary to evaluate alternatives and make choices among them as they continue to emerge.

This prescription is analogous, for governance of a changing society, to those advanced above for educational policy and for our approach to the analysis of values. In all three cases, the emphasis shifts from allegiance to the known, stable, formulated, and familiar, to a *posture* of expectation of change and readiness to deal with it. It is this kind of shift, occurring across many elements of society, that is the hallmark of a truly Heraclitean age. It is what Vogt seeks to formalize in stressing processual as against structural analysis of culture and society. The mechanisms, values, attitudes, and procedures called for by a social posture of readiness will be different in kind from those characteristic of a society that sees itself as mature, "arrived," and in stable equilibrium. The most fundamental

political task of a technological world, in other words, is that of systematizing and institutionalizing the social expectation of the changes that technology will continue to bring about.

I see that task as a precondition of profiting from our accumulating knowledge of the effects of technological change. To understand those effects is an intellectual problem, but to do something about them and profit from the opportunities that technology offers is a political one. We need above all, in other words, to gauge the effects of technology on the *polity*, so that we can derive some social value from our knowledge. This, I suppose, is the 20th-century form of the perennial ideal of wedding wisdom and government.

REFERENCES AND NOTES

1. Herman Kahn and his associates at the Hudson Institute have made a major effort in this direction in *Toward the Year 2000: A Framework for Speculation*. New York: Macmillan, 1967.

2. L. White, Jr. *Medieval Technology and Social Change*. New York: Oxford Galaxy Book, 1966, p. 28.

3. Melvin Kransberg has made this same point in *Virginia Quarterly Review*, 1964, Vol. 40(4), p. 591.

4. I deal extensively (albeit in a different context) with the making of new possibilities and the preclusion of options by making choices in my *How Language Makes Us Know*. The Hague: Nijhoff, 1964, Chap. 3.

5. One such case is described by E. Z. Vogt, *Modern Homesteaders: The Life of a Twentieth-Century Frontier Community*. Cambridge: Harvard University Press, 1955. The Mennonite sects in the Midwest are another example.

6. J. H. Steward. *Theory of Culture Change: The Methodology of Multi-linear Evolution*. Urbana: University of Illinois Press, 1955, p. 37. Steward is generally critical of such fellow anthropologists as Leslie White and Gordon Childe for adopting strong positions of technological determinism. Yet even Steward says, "White's . . . 'law' that technological development expressed in terms of man's control over energy underlies certain cultural achievements and social changes [has] long been accepted." (p. 18)

7. See L. White, Jr. (w, pp. 44 ff. and 28 ff.). Note especially White's contention that analysis of the influence of the heavy plow has survived all the severe criticisms leveled against it.

8. K. J. Arrow. "Public and Private Values," in S. Hook (ed.), *Human Values and Economic Policy*. New York: University Press, 1967, p. 4.

9. R. L. Heilbroner points up this unforeseeable element--he calls it the "indirect effect" of technology--in *The Limits of American Capitalism*. New York: Harper and Row, 1966, p. 97.

10. J. Dewey. *Theory of Valuation*. International Encyclopedia of Unified Science, Vol. 2, No. 4. Chicago: University of Chicago Press, 1939. The model of the ends-means continuum that Dewey developed in this work should prove useful in dealing conceptually with the value changes implicit in new technology.

11. D. Bell. *The Public Interest*. No. 6 (Winter, 1967). See also R. E. Lane (12) for evidence and a discussion of some of the political implications of this development.

12. R. E. Lane. *American Sociological Review*, October, 1966, Vol. 31(5), p. 652.

13. E. G. Mesthene. *Technology and Culture*, Spring, 1965, Vol. 6(2), p. 226. D. Schon also has recently recalled Heraclitus for a similar descriptive purpose and has stressed how thoroughgoing a revolution of attitudes is implied by a recognition of the pervasive character of change [*Technology and Change*. New York: Delacorte Press, 1967, p. xi ff.]

14. In addition to Bell and Lane (11), see also L. K. Caldwell, *Public Administration Review*, June, 1967, Vol. 27(3); R. L. Heilbroner, (9, pt. 2); and A. F. Westin, *Columbia Law Review*, June, 1966, Vol. 66(6), p. 1010.

15. See "Social Goals and Indicators for American Society," *Annals of the American Academy of Political and Social Science*, May and September, 1967, Vol. 1(2).

16. R. K. Merton. *Social Theory and Social Structure*. Glencoe, Ill.: The Free Press, 1949, p. 348. Hessen's analysis is in "The Social and Economic Roots of Newton's Mechanics," *Science at the Crossroads* series, London: Kniga, no date. The paper was read at the Second International Congress of the History of Science and Technology, June 29 to July 3, 1931.

17. Quoted in *Graduate Faculties Newsletter*, (Columbia University, March, 1966).

18. E. Z. Vogt. *American Anthropologist*, 1960, Vol. 62(1), pp. 19, 20.

19. The structure-process dualism also has its familiar philosophical face, of course, which a fuller treatment than this paper allows should not ignore. Such a discussion would recall at least the metaphysical positions that we associate with Aristotle, Hegel, Bergson, and Dewey.

20. P. Wheelwright. *Heraclitus*. New York: Atheneum, 1964. In his commentary on fragments 28 to 34, Wheelwright makes clear that the element of fire which looms so large in Heraclitus remains a physical actuality for him, however much he may also have stressed its symbolic character, pp. 38-39.

21. D. K. Price. *The Scientific Estate*. Cambridge: Harvard University Press, 1965, p. 15.

22. J. K. Galbraith. *The New Industrial State*. Boston: Houghton Mifflin, 1967, p. 393.

23. I am indebted to conversations with John R. Meyer and to a personal communication from Robert M. Solow for clarification of this point.

24. These points are made and discussed by R. S. Morison, "Where Is Biology Taking Us?" in *Scientific Progress and Human Values*, E. and E. Hutchings (eds.), New York: Elsevier, 1967, pp. 121 ff.

25. Examples of such apocalyptic literature are: J. Ellul, *The Technological Society*. New York: Knopf, 1964; D. Michael. *Cybernation: The Silent Conquest*. Santa Barbara, Calif.: Center for the Study of Democratic Institutions, 1962; and J. W. Krutch. *New York Times Magazine*. July 30, 1967.

26. See, for example, the sections "Science, Politics and Government," in L. K. Caldwell, *Science, Technology and Public Policy: A Selected and Annotated Bibliography*. Bloomington: Indiana University Press, 1968.

27. For a more extended discussion, see E. G. Mesthene, *Public Administration Review*, June, 1967, Vol. 27(2).

28. S. M. Lipset. *Daedalus*, 1964, Vol. 93, p. 273.

29. H. Brooks, "Scientific Concepts and Cultural Change," in *Science and Culture*. Boston: Houghton Mifflin, 1965, p.71.

30. I thank my colleagues for comments during the preparation of the article, and especially Irene Taviss of the Harvard Program on Technology and Society.

THE MEASUREMENT OF LENGTH BY CONGENITALLY BLIND CHILDREN AND A QUASIFORMAL APPROACH FOR SPATIAL CONCEPTS*

Peter Duran[1]
NASA Electronics Research Center
Computer Research Laboratory

Sylvia Tufenkjian[2]
Sensory Aids Center
Massachusetts Institute of Technology

ABSTRACT

The major task was an analysis and description of the use of the haptic sense as it bears on the blind child's perception of length. Congenitally blind children were chosen as subjects in order to isolate those perceptions derived through tactile learning. This paper presents a quasiformal approach and point of view for investigating spatial concepts and describes an experiment inculcating this point of view. In the quasiformal approach the behavior of an organism or machine is differentiated into four parts: input, memory, logic, and display. This point of view is applicable to the sighted, blind, deaf, and so forth. The experiment yielded several valuable conclusions concerning abilities of blind children, and the application of these conclusions to the teaching of blind children was discussed.

*This research was supported by the Department of Health, Education, and Welfare, VRA, under contract SAV 1036-65 and 1054-66, to the Sensory Aids Evaluation and Development Center, MIT.

This paper is reprinted by kind permission of the authors.

[1]Now at the Biological Computer Laboratory, University of Illinois.

[2]The authors wish to express their appreciation to Drs. Warren Brodey, Benjamin White, and Richard Held for their encouragement and helpful suggestions. The authors thank Wayne Lea for providing the remarks concerning formal mathematical models and Marcia Kirssin for proofreading the manuscript.

The field of spatial perception and spatial conception in psychology does not possess any mathematically formal and encompassing point of view. Terminology such as "physical space," "perceptual space," and "conceptual space" is used without first being defined. Such usage leads to ambiguity and misconception. It is difficult to present a formal theory which might have utility in "spatial" investigation, but an attempt is made to lay the groundwork for the definition of the basic concepts in this field. A quasiformal model for spatial perception and the perception of length by congenitally blind children is developed.

The mathematician has come to realize that there are many possible models for physical space. Each possible mathematical model characterizes properties of the phenomena being modeled and provides definitions and axioms in such a form as to allow deduction of further properties. The resulting deductions explain known properties of the modeled system of phenomena and predict new properties. There is no a priori reason to prefer one such model over another. Involved in the selection of adequate models are the general criteria of (a) correspondence with observed phenomena, (b) prediction of new phenomena and properties, (c) simplicity and systematization of representation, and (d) explicit explanations for the sources of failures of inadequate models. "A good model is judged not only by its predictive power, but by the clarity with which its failures offer constructive interpretations" (MacKay, 1954).

The need for adequate explanation of previous data and for predictability is widely accepted. However, the values of "simplicity" and "failure localization" are not so universally recognized (Lea, 1966). The structure of the mathematical model might be justified if criteria (c) and (d) were met, as well as (a) and (b).

Rather than just listing all known data, an effort to systematize should be made, since to systematize is to simplify. A simple model is preferable because of the economy of effort and the scope of explanation and prediction which it may provide. Systematization is accomplished by developing general laws of behavior which explain known data and predict further phenomena.

Since models should indicate constraints and relationships in observed phenomena, and since the adequacies and inadequacies of models ought to be clearly evident, it is required that models be formally and precisely specified. Moreover, a formal model may automatically provide solutions for some problems in addition to those it was originally designed to solve. In this way it plays an important positive role. But the formal model may also play the positive role

specified in (d) above. By pushing a precise but inadequate [as in (a)] formulation to unacceptable conclusions, the exact sources of inadequacies can be exposed. Vague or obscure models can, in contrast, neither lead to logically absurd conclusions nor yield new and testable correct ones.

Thus not only can formal models afford precise, observable and testable explanations and predictions of phenomena, but they also can suggest overt indications of the sources of inadequacies of the models. A good example of the value of formal models occurs in modern physics. In physics, formal models which have been found to be inadequate because of lack of full correspondence with experimental data have been improved by locating the sources of inadequacy and applying appropriate corrections. In this sense, if a physical theory has been proved inadequate, a major part may still be salvaged and extended into a new and more encompassing theory.

Due to the complexity and overwhelming variability in human behavior, psychologists encounter difficulty in taking this formal point of view in the investigation of spatial concepts. To remedy the situation, an abstract mathematical point of view should be put forth and hypotheses based upon this point of view should be tested. If the hypotheses are experimentally confirmed, they may be taken as fundamental propositions of the model. If they are experimentally invalidated, the experimental results should be formulated into new hypotheses. In this way a model may have some of its invalid assumptions and predictions replaced by experimentally verified propositions. If in this manner the model cannot be corrected, another model should be put forth.

HISTORY

Much of the literature (Axelrod, 1965; Bartley, 1953; Bartley, Clifford, and Calvin, 1955; Drever, 1955; Hunter, 1954; Worchel, 1951, pp. 1-21) regarding "spatial perception" of the blind is based on the investigation of the presence or absence of visual imagery in the blind. Its presence or absence in the blind is considered to be an indication that the conceptual space of the blind is, respectively, the same or different from that of the sighted. Since the occurrence of visual imagery in the blind may not actually indicate any essential features of their spatial conception, the inconclusive results of this literature are not unexpected. Another reason for the inconclusive results of these investigations may be the nebulous distinction between perceptual and conceptual spaces. Cutsforth (1933) investigated the relationship between tactile imagery in the sighted and visual imagery in the same sighted.

More understanding of the blind person's spatial conception might be gained if the relationship between the tactile imagery of the blind and the visual imagery of the sighted were studied, using approaches similar to Cutsforth's. It might also prove useful to investigate the relation of visual and tactile imagery in the adventitiously blind.

For lack of a comprehensive theory, many of these investigations have dealt with specific problems of diverse nature. A more recent and comprehensive approach has been taken by Juurmaa (1965). He has made an "Analysis of the Ability for Orientation and Operations with Spatial Relationships in General." He has posed the following type of question: "What psycho-physiological processes constitute the necessary and sufficient foundations for a given function (that is, the obstacle sense)?"

Mathematicians have formalized and clarified many branches of thought. For example, those properties which are essential for geometry have been carefully delimited. Piaget (Piaget and Inhelder, 1963; Piaget, Inhelder, and Szeminska, 1960) has structured his experiments in the investigation of spatial concepts of the sighted child such that they embody these essential mathematical notions. The power of his approach lies in the fact that the mathematical notions can be used as a standard against which to compare the child's conception. Much of Piaget's experimentation was constructed on the logically organized geometrical concepts of the mathematician.

Piaget (Piaget and Inhelder, 1963) described the child's haptic (Gibson, 1966, Chaps. 6 and 7) activity. He found that the first properties haptically discernible by a child were those described by mathematicians as topological. Topology is that branch of geometry concerned with those concepts common to all geometries. An example might be helpful. Suppose a square were drawn on a sheet of rubber. One could state many properties of the square: (a) it is composed of four straight line segments of equal length; (b) it is a continuous closed curve; (c) it has four equal right angles; and (d) it divides the surface of the rubber sheet into two parts (that portion contained within the square and that portion outside the square); and so forth. Now suppose that the rubber sheet is stretched and/or twisted; only properties (b) and (d) are still true in the distorted figure. Such a property is called a topological invariant. It is quite remarkable that the first geometrical properties that children are able to discern are topological invariants. Length is not a topological invariant as illustrated by our example.

Piaget (Piaget *et al.*, 1960) discussed the sighted child's conception of length. His experiments delineate those aspects of length which seem to be fundamental in vision. However, Piaget (Piaget and Inhelder, 1963, pp. 17-37) did not investigate the role of haptic perception in the development of the concept of length.

QUASIFORMAL APPROACH

When the relationship between machines and their environment is discussed, automata theorists usually approach the problem by differentiating four major questions: (a) input--how does the machine receive information from the environment; (b) memory--how does the machine store (represent) the information it receives; (c) logic--how does the machine manipulate the stored information; and (d) display--how does the machine exhibit and communicate the end products of its logical manipulations? We suggest that a theory of spatial investigation should be developed along these lines.

Sensory Input

If organisms are regarded as very elaborate machines, useful analogies between the sensory systems of organisms and the input apparatus of machines can be made (Hartmanis and Stearns, 1966). All that the machine can become aware of must be transmitted to it through its input devices (Hermann and Kotelly, 1967). For example, a machine which does not have a light sensitive input device cannot detect light. A machine which does not have a suitable vibratory plate for an input device cannot detect sound. Similarly, an organism which does not have light or sound sensitive apparatus cannot be expected to "sense" light or sound.

The physical space associated with an organism or machine shall be defined to be the set of all sensible or detectable signals through all its sensory or input apparatus- We define the physical space of an organism, or machine, *A* to be equal to that of an organism, or machine, *B* if *A* has the same sensory or input apparatus as *B*. The physical space of *A* will be said to be larger than that of *B* if every sensory or input apparatus which *B* possesses *A* likewise has, but *A* has additional sensory or input apparatus. For example, two healthy newborn infants *A* and *B* have the same sensory apparatus and hence the same physical space, all other things being equal. On the other hand, a newborn infant who is blind has a smaller physical space than that of a sighted infant, all other things being equal. It is clear from the definition that all organisms and a large class of machines can be said to have physical spaces.

Memory

One of the most striking abilities of organisms and modern computing machines is the capacity to represent the signals transmitted by their sensory or input apparatus. This is an important feature of memory. It is essential that these representations be fixed in some fashion within the organism or machine. We do not propose to discuss the phenomenon but only maintain that it or something akin to it is present in some organisms and machines.

Logic

The organism or machine may or may not transform the representations into other representations. An answer to this question for a particular organism or machine must be left to experimental investigation. If each representation is transformed into itself, that is, remains the same, this transformation is called the identity transformation. On the other hand, a representation may be transformed into a different one, or two or more representations may be combined. The transformation involved can be described in mathematical terms without specifying physiological or psychological mechanisms (Hermann and Kotelly, 1967, pp. 273-83). The set of these transformations shall be called the logic of the organism or machine. In other words, the logic is the rearrangement and organization of the representations.

This definition of logic enables us to make the following definitions: (a) The set of representations of the inputs of an organism or machine is the perceptual space of the organism or machine. (b) The end result of applying the logic of the organism or machine to the set of representations of the inputs is the conceptual space. The perceptual and conceptual spaces are the same if the logic does not alter the set of representations. By this definition of logic, two organisms or machines may have identical perceptual spaces but distinct conceptual spaces. Even though two organisms or machines have distinct conceptual spaces, it might be possible to develop a theory which would permit one of the organisms or machines to transform the conceptions of the other into conceptions which are meaningful to itself. In light of this observation it is interesting to inquire whether much of the difficulty in the teaching of blind children, communication, and diplomacy might be due to a lack of techniques by which one person can translate his conception into those of another via appropriate transformations.

Display

An organism or machine must have modes of expression or display apparatus by which the end products of its logical transformations can be exhibited, used to alter itself or the environment, and communicated. The structure of the organism or machine will determine in part the manner and extent to which these three activities take place. The fact that an organism or machine possesses modes of expression and display apparatus is a necessary but not a sufficient condition for communication, for the organism or machine receiving the product of the display must be able to interpret this product as communication (that is, as a transfer of information). The modes of expression or display apparatus exhibit or represent the perceptual and/or conceptual activity of the organism or machine which might be interpreted as communication by another organism or machine.

THE PHYSICAL AND CONCEPTUAL SPACES OF THE BLIND AND SIGHTED

In light of this general discussion, specific issues relating to organisms with and without sight arise. The structure of our theory does not preclude the possibility that two organisms, one having a physical space greater than the other's may, or may not, have the same conceptual space. For example, congenitally blind and sighted persons have different physical spaces but may, or may not, have similar conceptual spaces. On the other hand, two organisms may have the same physical space but their conceptual spaces may be different if one of them has gained perception through some input apparatus which is no longer being used. For example, a congenitally blind and an adventitiously blind person have the same physical space but nevertheless may, or may not, have the same conceptual space, and further the conceptual space of the adventitiously blind may, or may not, be the same as that of the sighted. Whether the elimination or addition of a given sensory input changes the conceptual space must be decided by experiment. It may be in only some instances that having different physical spaces would imply having different conceptual spaces.

The research of von Senden (1960) has raised the following questions: (a) Under what circumstances can inputs to distinct senses (for example, hearing and seeing) give rise to the same perception? The existence of such a phenomenon (synaesthesia) has been demonstrated (Cutsforth and Wheeler, 1922). Examples are phonism (an auditory perception occurring when another sense is stimulated) and chromatism (a visual perception occurring when another sense is

stimulated). (b) Can distinct perceptions give rise to the same conception? (c) Could representation be a function of the sensory or input apparatus? (d) Could logic depend on representation and/or sensory apparatus?

A MATHEMATICAL DESCRIPTION FOR LENGTH

It is very difficult to describe objectively the blind child's conceptions and perceptions of length, for we tend to compare his conceptions and perceptions to those of the sighted taken as a standard. If the abstractions of the mathematician are taken as a referent, the conceptions and perceptions of both the blind and sighted can be compared to the mathematical formulation. Then the abstract mathematical representations of the conceptions and perceptions of the blind and sighted may be compared, and common and distinctive features delineated. The following mathematical concepts and terms will be useful in this approach.

One of the most fundamental notions of mathematics is that of a function. A function is a special form of a multivalued function. A multivalued function is a rule which associates an object of one collection with one or more objects of a second collection. The objects in the second collection associated by the rule to an object of the first collection are the correspondents of the object in the first collection. Since the reader may be unfamiliar with the concepts of function and multivalued function, several examples will be given. (a) Let each word in the English language have as correspondent the number of its letters; for example, "3" corresponds to "cat," "12" corresponds to the word "psychologist," and "12" also corresponds to the word "physiologist." In this example the words of the English language are the objects in the first collection and the positive integers are the objects in the second collection. The multivalued function is the rule "each word of the English language is associated with the number of its letters." (b) A person can correspond to the shoes that he is wearing; in this case the person, a single object, has as correspondents two objects, his left and right shoe. In order for a multivalued function to be a function, each object in the first collection must have at least one, and at most one, correspondent in the second collection; rule (a) is a function, and rule (b) is a multivalued function but not a function. It should be noted that in (a) two distinct objects in the first collection (for example, "psychologist" and "physiologist") have the same correspondent, 12. Since each word in (a) has one, and only one, correspondent, the definition of a function is not violated. For convenience, functions will be denoted by upper case letters. For functions, an arbitrary thing in the first collection is denoted x (lower case letter) and its

correspondent is denoted $F(x)$. For example, in (a), x is a word of the English language, $F(x)$ is the number of letters in the word (F[cat] = 3).

In elementary geometry a line segment is presumed to have magnitude or length. We associate a magnitude with pieces of string, pieces of thin rod, and the like, which in some intuitive sense corresponds to its extension. This associated magnitude is called the length of an object. Let us denote this correspondence as follows: let x be some object and denote its length by $L(x)$. In other words, we have a correspondence $x \rightarrow L(x)$. Since we assume that an object has one and only one length, this correspondence is a function. Intuitively we would like the length of an object to satisfy certain conditions.

If x is a physical object we would want its length to be greater than zero; that is, (a) for each x, $L(x) > 0$. If two objects x and y are placed end to end we would like to consider that a new object has been formed--denoted by $x \cdot y$ and read "x juxtaposed with y" (Bunge, 1967). If x and y are two objects, the length of the compound object $x \cdot y$ should be

$$(b)\ L(x \cdot y) = L(x) + L(y).$$

As a special case of (b) we have

$$(b')\ L(x \cdot x) = L(x) + L(x) = 2L(x);$$

for example, if two foot rules are placed end to end, the length of the whole is twice the length of the foot rule. Using mathematical induction we can derive from (b') the following corollary (b''):

$$L(x^n) = nL(x),$$

where n is any positive integer and x^n denotes $x \cdot x \cdot \ldots \cdot x$ (n-factors). Let x and y be two objects such that their lengths differ by an amount Δ, that is,

$$L(x) = L(y) + \Delta.$$

If z is another object we would expect (Halmos, 1950) (c)

$$L(z \cdot x) = L(z \cdot y) + \Delta.$$

The requirement that L is a function means that each object should have a unique length, and statement (a) requires that this length have a magnitude greater than zero. Condition (b) requires that the length of a compound object should neither be less than nor greater than the sum of the lengths of its constituents. In other words, the juxtaposition of two objects should not cause a diminution or increase in the sum of the total lengths. This property will be termed length conservation (Piaget *et al.*, 1960). Statement (c) says that if two objects differing in length by a given amount have another object z of length $L(z)$ juxtaposed to each of these then the resultant objects should differ by that same amount.

In measure theory the values which the function L may take is the set of non-negative real numbers together with infinity (Halmos, 1950). From the psychologist's point of view a subject may not be able to perceive or distinguish very large or very small magnitudes.[3] The following experiment could be used to determine condition (a). Present a subject with objects x_i whose lengths $L(x_i)$ tend toward 0. Request the subject to estimate the lengths of x_i. From the data one of the following situations would be discernible: (a) the estimates reach a minimum value which remains constant as $L(x_i)$ decreases; (b) the estimates do not reach a minimum value but keep decreasing as $L(x_i)$ decreases; or (c) the estimates reach a minimum value such that there is no estimate of $L(x_i)$ for some x_i. A similar experiment can be done on objects x_i whose lengths $L(x_i)$ become arbitrarily large. These two limits, if they exist, may correspond to the lower and upper thresholds.

The following experiment could be used to test the general law of conservation. Ask the subject to estimate the absolute lengths of two objects x and y. Then ask him to estimate the length of the compound object $x \cdot y$. If the sum of his estimates of $L(x)$ and $L(y)$ are either less than or greater than his estimate of $L(x \cdot y)$, then we know that the conservation law does not hold for his perceptual estimates.

Using the corollary that $L(x^n) = nL(x)$, the above experiment can be simplified. Present a subject with an object x and ask him for an estimate of the length of x. Next present him with powers of x (that is, x^n) and ask him to estimate the length of these powers. If his estimate of the

[3]Piaget (with colleagues, 1960) has shown that children do not believe that a line segment can be subdivided indefinitely.

length of x^n is less than n times the estimate of the length of x, then the conservation law does not hold for his perceptual estimates. The modified law would be $PL(x^n) < n\ PL(x)$, where $PL(x)$ is the perceptual estimate of the length of x. The same reasoning follows for the reverse inequality.

The following experiment can be used to test the validity of condition (c) for perceptual estimates of length. Ask the subject to make an estimate of the length of an object x and the length of an object y. To x and to y, juxtapose an object z. Then ask the subject to make estimates of the length of $x \cdot z$ and $y \cdot z$. If the absolute value of the difference between the estimated lengths of x and y does not equal the absolute value of the difference between the estimated lengths of $x \cdot z$ and $y \cdot z$, then condition (c) does not hold.

STATEMENT OF THE PROBLEM

Our major task is an analysis and description of the use of the haptic sense as it bears on the blind child's perception of length. Congenitally blind children were chosen as subjects in order to isolate those perceptions derived through tactile learning. In addition these perceptions will be related to the conditions for length discussed above. The following experiment and additional ones will permit a formal description of the congenitally blind child's perception of length.

In the above paragraphs, we expounded the theoretical point of view for our experimentation. In the following experiment we investigated the procedures and techniques congenitally blind children use in the estimation and comparison of lengths. The accuracy of the discrimination associated with these measurements was also studied. The following hypotheses reflect the role of haptic phenomena in the congenitally blind child's perception of length:

1. A blind child uses his body parts as instruments of measure.

2. Kinesthesis and time duration are two bases for the techniques of measurement.

3. The physical size of the objects determines the technique used for the measurement.

4. As the physical length of the object increases, the corresponding DL increases independently of the technique used.

METHOD

Subjects

Subjects were 20 female and 14 male congenitally blind students at Perkins School for the Blind.[4] Subjects ranged in age from 5 to 14 years. The IQ of the subjects ranged from 70 to 135 as measured by the Interim Hayes Binet and the Wechsler Intelligence Scale for Children. Only those students who were congenitally blind or blinded before the age of 2 years were chosen as subjects. (One subject was blinded at the age of 4 years.) This criterion was used since this study was concerned with spatial perceptions derived from nonvisual experience. Twenty-one subjects were totally blind and thirteen had light perception.

Stimuli

The stimuli were steel rods cylindrical in shape with a circular cross section. The diameter was 1/16 in. (.0625"). A 1-in. length of rod weighed .016 oz. The rods ranged in length from 1 to 12-1/2 in. in 1/16-in. increments. Therefore, the total number of rods was 185.

Procedure

The first time the subject reported to the experiment area, the purpose of the experiment was explained to him and he was given the following instructions: "I am going to place a rod on the desk directly in front of you. I want you to feel this rod and then put it down. Then I will place a second rod on the desk for you to feel." (While presenting the instructions the examiner guided the subject's hand to the rod placed on the desk.) Once the subject carried out the instructions, he was asked the question: "Are these rods the same or different?" This was asked to ascertain whether the subject noticed the difference in the rods (that is, the difference between their lengths) and whether he understood the relations "is longer than" and "is shorter than." The rods differed in length by 4 in. The rods were removed after the subject indicated he was aware of the distinction.

Then the examiner presented a second pair of rods according to the above procedure and posed the question: "Are

[4]We would like to express our appreciation to the staff of the Perkins School in Watertown, Massachusetts, for providing the subjects and facilities for the present study.

these rods the same or different in length? If they are different, which is the longer or the shorter?" The difference in length between these two rods was much smaller than the difference between the lengths of the first two rods. The method of constant stimuli was used to determine the upper difference threshold (DL) for each standard. The rods of integral length were the standard stimuli. Since the upper DL was of major concern, the variable was always longer than the standard stimulus. Each comparison was presented five times and each standard was compared with several values of the variable. A value of the variable to be used depended on the results gained from the use of the previous value for the variable. The classical definition of the difference threshold is: "that value of the physical stimulus change that is noticeable 50 percent of the time" (Underwood, 1966, p. 134). Since there were five trials for each comparison, we took 60 percent correct responses as the criterion.

The stimuli were divided into two classes: 1", 3", 5", 7", 9", 11"; and 2", 4", 6", 8", 10", 12". A subject was presented with only one group of stimuli. Testing usually required three 45-minute sessions with each child. All three sessions were held in the same week.

RESULTS AND DISCUSSION

Methods Used in Rod Comparison

The choice of method or methods a subject would use when comparing lengths was left to him. Hence, when presenting the subjects with the rods to be compared, the examiner did not specify the procedure to be employed. This procedure was used to simulate a life situation and to avoid imposing an artificial experimental structure. From this experiment five distinct classes of methods were discerned: spontaneous methods, body part as a measuring instrument, kinesthesis, time duration, and physical principles. It should be noted that except for the spontaneous methods, the subject estimated the length of the first rod and next the length of the second rod; then on these two estimates he made the comparison.

(1) Spontaneous Methods

The first methods spontaneously used were of two types. After employing one of them the subject was not permitted to use this technique again. This allowed us to determine what other methods would be used.

Description of Juxtaposition. First the subject juxtaposed one rod against the other. While juxtaposing rods he coincided two of the endpoints. Then, while holding the pair of rods in one hand in this configuration, he compared the remaining two endpoints with a finger of the other hand.

Description of Palm Span. The subject held both rods in one hand so that they did not touch one another. The rods were held vertically in a plane parallel to the subject's frontal plane and an end of each rod was placed upon a horizontal support (desk top). The palm of the other hand was then rested across the top of the two rods.

Basis for Juxtaposition and Palm Span. The subject uses the noncoincidence of endpoints to determine the longer rod. Piaget (Piaget *et al.*, 1960) observed the phenomenon of the use of noncoincidence of endpoints in the visual estimation of length.

(2) Body Part As a Measuring Instrument

Description of Use of a Reference Point. The subject placed the end of a rod at some point on the body surface and rested the rod against the adjacent skin. He repeated the procedure with the second rod. The three locations on the body surface used were the wrist, the base of a proximal phalanx of the forefinger or little finger, and the umbilicus. One end of the rod was placed at a point on the wrist extending over the palm in the direction of one of the metacarpals, or one end of the rod was placed at the base of a proximal phalanx and extended along the finger. With respect to the finger and the wrist, the rod was rested against the surface of the hand which comes in contact with an object when grasping. If the umbilicus were used, one end of the rod was placed on it, and the rod was placed along the anterior surface in the sagittal plane extending in the cranial direction.

Basis. The subject places an end of a rod at a reference point on a body part. The other end falls on a point, *A*, of the skin. The same procedure is followed with the second rod and its end falls on a point, *B*, of the skin. The subject then decides that the first rod is longer than the second if *A* seems farther from the reference point than *B*. This interpretation is supported by the fact that the subject chooses the same reference point for each rod.

Description of Use of a Unit Measure. While holding the rod vertically the subject grasped the lower end

between the thumb and forefinger of one hand. The thumb and forefinger were held perpendicular to the rod. The subject then grasped the rod in similar manner with the other hand, above and adjacent to the fingers of the first hand. Then he removed the fingers of the first hand and placed them above the fingers of the second hand. In this manner he progressed to the other end of the rod.

The rod could also be held horizontally. If it was shorter than the width of the fist, the subject used the following method: beginning at one end, he placed one or more adjacent fingers on the rod until the length of the rod was covered. If the rod was longer than the width of his fist, he modified the above approach. Beginning at one end of the rod he wound the four fingers of one hand around it. Next he wound one or more adjacent fingers of the other hand about it and next to the first hand placed on the rod. If the entire rod was not covered, he removed the first hand and placed it on the opposite side of the second hand. In this way he moved to the other end of the rod.

Basis. In these two methods, the width of a finger is the unit of measurement. One rod is judged to be longer than the other if a larger multiple of this unit is necessary to cover it.

Description of Use of Surface Area. The subject placed the rod on the desk so that it was perpendicular to his frontal plane. Then he dropped the palm of his hand on the rod so that one end of the rod was under his wrist with the rod lying under his palm and a finger. This procedure was repeated with the second rod.

Basis. The amount of surface area stimulated by the rod is proportional to the length of the rod. The subject uses this proportionality relation in the comparison.

(3) Kinesthesis

Description. If the first rod was shorter than the maximal distance between the tip of a thumb and tip of the little finger of the same hand, the subject held the endpoints of the first rod between the tips of two fingers of one hand. If the first rod was longer than the spread of his hand, the subject employed both hands. He held the ends of the rod between the tips of his forefingers. This was repeated with the second rod.

Basis. The subject uses dynamic touching (Gibson, 1966, p. 109); that is, stimulation of the skin and joints in combination with muscular exertion.

(4) Time Duration

Description. For rods longer than the hand span the subject slid the tip of a finger along the rod from one end to the other.

Basis. The duration of time needed to traverse the rod is probably the basis for the length measurement. This basis could be confirmed by presenting subjects with rods of identical length but having different surface properties (for example, identically shaped rods having different coefficients of friction). The rod requiring the longer traversal time should be judged the longer by the subject.

(5) Physical Principles

Description. For long rods the subject held one end between two fingers of one hand and tapped the other end against the desk top.

Basis. The subjects maintain that the longer rod has a lower pitch.

Description. The subject held one end of the rod between the tips of two fingers of the same hand and waved the rod. This method was used infrequently and only for longer sized rods.

Basis. On the downward swing the rod exerts force against the supporting finger. This force may be explained by the moment of inertia. The moment of inertia for a uniform homogeneous rod is equal to the mass of the rod times the square of half its length. The difference in masses, or the difference in absolute lengths, may not be a sufficient cue but the combined effect of both in the form of the moment of inertia may be sufficient.

Implications of the Classification of Methods

Several conclusions can be drawn from the above classification. Classes two through five have one essential common feature. The magnitude of the criterion used (time duration, frequency, and so forth) is a monotonic function of the physical length of the rod. For example, if rod *A* is longer than rod *B*, the frequency produced by rod *A* will be lower than that produced by rod *B*. Several methods were used for rods less than or approximating hand span; and the remaining methods were used for rods larger than hand span. The methods could be classified according to this approximate dichotomy. The class to which each method belongs was stated

in their descriptions. This dichotomy indicates that there is no one basis for the perception of length.

This delineation of methods will enable teachers of blind children to understand more fully how their students learn the perception of length. These methods could be taught systematically to blind children. Perhaps there are methods other than these. One of the methods might be more accurate or useful in a given situation than the others. If so, this one should be emphasized.

Many tests are designed to measure specific mental or motor skills. Harbored within some of them is the implicit task of measuring length. For example, the child might be requested to build a square out of blocks. From the child's inability to do so, a tester might infer that this child had a low mental and/or motor capacity. But in fact, his inability to do so may be due to lack of skill in measuring the length of the building blocks. In other words, the failure of the subject to perform the task may reflect his inability to measure length rather than reflect his lack of understanding of the factor being tested. It has been assumed that each visual task has a tactual analogue. Even if this is so there is no reason to assume that the modified task measures the same psychic function as the visual task.

Difference Thresholds

Table 1 gives the mean, range and standard deviation of the DL associated with each stimulus. The ratio of each mean DL to its corresponding stimulus is also included. If these ratios are rounded to the nearest tenth, all except for the first three are equal to one-tenth. Gaydos (1958), using the method of adjustment, found that the ratio of the magnitude of variable error to the absolute length of the standard remained constant in the 1.4-in. to the 3.9-in. range of stimulus length.

t-tests were performed on the means given in Table 1. There were significant differences between the means for two-three, four-five, six-seven and eight-nine. However, there were no significant differences between the means for one-two, three-four, and so forth. Hence the data was pooled for stimuli one and two, three and four, and so forth. *t*-tests done on these group means showed there was a significant difference between these means. All means were significantly different at the 0.05 level or higher. This result implies there is a significant increase in the DL over a 2-in. increment. There was no correlation between the DLs and age, IQ, or sex.

Table 1

Difference Threshold Data

Stimulus Length (in.)	Mean DL (in.)	Range (lower limit)	Range (upper limit)	s	Ratio of DL/L
L 1	0.25	0.06	0.75	0.20	0.25
L 2	0.29	0.06	0.75	0.20	0.15
L 3	0.45	0.06	1.00	0.25	0.15
L 4	0.41	0.12	0.75	0.20	0.10
L 5	0.61	0.12	1.25	0.35	0.12
L 6	0.57	0.25	1.00	0.22	0.10
L 7	0.72	0.25	1.50	0.39	0.10
L 8	0.68	0.12	1.50	0.39	0.09
L 9	1.03	0.25	3.00	0.81	0.11
L 10	0.81	0.12	2.25	0.50	0.08

It should be noted that no means for stimuli 11 and 12 are given. The maximum rod length was 12-1/2 in. Hence when stimulus 11 was being tested a DL greater than 1-1/2 in. could not be inferred.

The Origin of DLs and Its Relation to Estimation

The methods used by subjects to estimate length have several distinct bases. Therefore it is unlikely that a single psychophysical or physiological principle could explain the relative constancy of the ratios given in the table. This relative constancy, as well as the fact that the DLs increase, can be more readily explained from another point of view. The occurrence of DLs in experiments such as ours can be partially explained on statistical grounds (Yilmaz, 1967). In most experiments where some unit or scale is being used, the relative error tends to be constant. Therefore the occurrence of DLs is at least partially due to the occurrence of relative error in measurement whether an organism or machine does the measuring. The constancy of the relative error of the organism or machine would be expected to cease

when the threshold levels of its measuring apparatus are exceeded.

If this interpretation of DLs is taken, it follows that the larger the DL associated with a particular stimulus, the less accurate is the measurement. In other words, as the rods get longer, the blind child's estimate becomes more inaccurate.

Conditions (b) and (c) for Length Fail to Hold. Three conditions for physical length were given in the introduction. Based on the existence of DLs and the fact that they increase, the following deductive proofs of the failure of conditions (b) and (c) are given.

Let x be any stimulus. For any x let $PL(x)$ be the perceived magnitude of the length of x. Let x and y be any two rods. If y is less than the DL associated with x, we have by definition of DL, $PL(x \cdot y) = PL(x)$. From experiment we have $PL(y) > 0$. These two results imply

$$PL(x \cdot y) < PL(x) + PL(y).$$

This is to say: the perception of a physical sum is less than the sum of perceptions. This deduction proves that the conservation law does not hold for estimates of perceived length.[5] This proof cannot be extended so as to let y take on values greater than the DL associated with x. The question arises whether such an extended proof can be found.

Let x and y be two rods such that $x = y \cdot \Delta$, where $\Delta >$ DL associated with y. By definition $PL(x) \neq PL(y)$. Since the DLs for length increase as the physical length of the stimulus increases, we can find a rod z so that the DL for $y \cdot z > \Delta$. Then $PL(x \cdot z) = PL(y \cdot z)$. It follows that condition (c) fails to hold for estimates of perceived length.

The sensory inputs used by the subjects in this experiment were indicated in the bases for the methods. These comprised that part of their physical spaces involved in the experimental task. The above derivations together with further experiments and derivations will yield a formal description of the blind child's perception of length. The blind child's conception of length can be investigated using procedures similar to those employed by Piaget in the study of the sighted child's geometrical conceptions.

[5]Since different organisms may apply distinct logics to the perceptual information, one organism may conceive in terms of the modified conservation law and the other may not.

There is no a priori reason to assume that the formal statement of the blind child's conception of length is the same as the formal statement of the blind child's perception of length. Since perceptions are modified by logical transformations into conceptions, the formal statement of the conceptions may be deduced if the formal statement of the perceptions and the logical transformations modifying them are known.

These conceptions may not be directly discernible if the blind child does not have any apparatus and/or modes of expression by which he can exhibit and communicate the end products of his logical manipulations. The blind child may provide a display which is encoded by him so as to have an information content but an observer may observe this display without interpreting it as communication if he does not know the information encoding of the blind child. In this experiment we observed the blind child's display (that is, the methods he used in the estimation and comparison of lengths) and induced the information content of these displays by inferring the bases for these methods.

Implications of Results

Several implications may be drawn from the above results. A blind child may be required to assemble a figure out of various sized blocks. If the length of an edge of a block differs from the length of an edge of another block by less than the DL associated with it, the blind child will be unable to determine which has the longer edge. In such a case it would be advisable to teach him to use weight comparison or area comparison. This would be useful only if the difference between the weights or areas is greater than the respective DLs associated with each. The blind child may be taught to superimpose the face of one block on the face of the second and use the overlap of faces as a criterion.

If a teacher were trying to teach the concept of length, the following procedure could be used: a series of rods could be constructed so that any two are clearly discriminable from each other with respect to their lengths by any one of the methods we have discerned. The blind child could be given two of these lengths at a time and he should notice that they differ in some respect. He could then be told that the difference he is noticing is a difference in length. Once he has "caught on" to the idea of difference in length the following procedure could be used: a series of rods could be placed in front of him increasing in length from left to right. Then he could be asked to manipulate the rods in turn from left to right. He should notice that each succeeding rod is different from the preceding one.

It should be explained to him that the first rod on the left differs from the second in the same way that the second differs from the third, and so forth. In this way the relation "is longer than" can be taught. Piaget (1965, Chap. 5; Piaget and Inhelder, 1963, Chap. 3) has found that in the sighted child the concept of order does not occur spontaneously but develops gradually. Therefore it would not be surprising if at certain ages this procedure proves inapplicable.

Since the Weber curve is known for weight, a series of blocks could be constructed so that any two are discriminable from each other with respect to weight but which are equal in every other geometrical and physical aspect. A similar procedure of teaching the concept of weight and "weighs more than" could be used. The same approach can also be taken regarding roughness. Once this has been done, multidimensional toys can be constructed; that is, a toy embodying several different properties where the number of properties is the dimension of the toy. For example, the child could be taught to build a column of blocks so that the weight of the blocks decreases in ascending order while roughness increases in ascending order. Or the weight and roughness can both increase from bottom to top. If a series of blocks varying in roughness, a series varying in weight and a series varying in hardness were given to the child, he could build a three-dimensional toy. Von Senden (1960) noted that young blind children apparently are intrigued by very simple objects, such as a boot. This may be due to the fact that roughness and curvature both vary along the boot, hence providing a two-dimensional toy.

To a blind child a block or a rod is indeed a multidimensional object even when its spatial dimensions are ignored. When constructing tests employing such objects this fact should be carefully noted. The blind child may not register a feature that the teacher is testing because he is occupied with many properties embodied within the object having import to him. In some tests a blind child is shown a geometrical figure composed of pegs and he is then asked to replicate it. Is he supposed to duplicate the abstract geometrical form or the spacing of the pegs? Piaget (Piaget and Inhelder, 1963, Chap. 1) noted that one of the first aspects to be noticed in geometrical figures by sighted children is proximity, a topological notion (Kelley, 1955, Chap. 1). The concept of proximity is a mathematical formalization of the concept of nearness (Kelley, 1955, p. 61). It can be assumed that for the blind child two things are in proximity when he can encompass them simultaneously with the same body part (that is, the same hand). For example, the child may be able to perceive simultaneously three adjacent pegs with one hand. If he has the notion of proximity he will discern the nearness relations of the three pegs.

However, if there are more pegs than he can feel at one time, he will discern local relationships but not the global or total relationships within the figure. This might explain why the blind child makes small parts of his figure similar to corresponding small portions of the original but fails to replicate the global aspects accurately.

The blind child's lack of geographical comprehension even when he has been taught with the use of relief maps may be partly explained as follows: when two distances are being compared on the map, they will be judged equal when the difference between their magnitudes is less than the DL associated with the shorter distance.

It would be interesting to investigate whether there is a length which is most accurately estimated. If there is such a length, it could be used as a unit of scale in tactual representations of graphs and other figures requiring a relatively precise estimate of length. This would not allow the blind child to rid himself of the confusion arising from DL considerations but permit him to consider multiples of a standard unit as a criterion (that is, use a counting process). This length would most likely be the one having a minimal DL associated with it.

If time duration is being used by the child for his criterion of measure, caution should be taken not to have lines of different coefficients of friction or texture in the same diagram, figure, graph, map, and the like. The length of a line with a given texture or coefficient of friction may appear shorter than a line of equal length but with a different texture or coefficient of friction due to altered time traversal. This may explain the blind child's difficulty in discerning the proportions of a figure.

SUMMARY

This paper has endeavored to do two things: to present a quasiformal approach and point of view for investigating spatial concepts; and to describe an experiment inculcating this point of view. In the quasiformal approach the behavior of an organism or machine is differentiated into four parts: input, memory, logic, and display. This point of view is applicable to the sighted, blind, deaf, and so on. The experiment has yielded several valuable conclusions concerning abilities of blind children, and the application of these conclusions to the teaching of blind children was discussed. The major classes of methods for measurement of length by congenitally blind children are: juxtaposition and noncoincidence of endpoints, body part as a measuring instrument, kinesthesis, time duration, and physical principles. The principal conclusions are:

(a) The physical size of the objects will determine the technique used for the measurement.

(b) As the physical length of the object increases, the corresponding DL increases independently of the technique used.

REFERENCES

Axelrod, S. *Effects of Early Blindness: Performance of Blind and Sighted Children on Tactile and Auditory Tasks.* New York: American Foundation for the Blind, 1959.

Bartley, S. H. "The Perception of Size or Distance Based on Tactile and Kinesthetic Data," *Journal of Psychology*, 1953, Vol. 36, pp. 401-08.

Bartley, S. H., Clifford, L. T., and Calvin, A. D. "Effect of Visual Imagery on Tactual and Kinesthetic Space Perception," *Perceptual Motor Skills*, 1955, Vol. 5, pp. 177-84.

Bunge, M. *Scientific Research.* Vol. 2: *The Search for Truth.* New York: Springer-Verlog, 1967.

Cutsforth, T. D. "An Analysis of the Relationship Between Tactual and Visual Perception," *Psychological Monographs*, 1933, Vol. 44, pp. 126-52.

Cutsforth, T. D., and Wheeler, R. H. *The Synaesthesia of a Blind Subject with Comparative Data from an Asynaesthetic Blind Subject.* Eugene, Oregon: University of Oregon Publications, 1922.

Drever, J. "Early Learning and the Perception of Space," *American Journal of Psychology*, 1955, Vol. 68, pp. 605-14.

Gaydos, H. F. "Sensitivity in the Judgment of Size by Finger-Span," *American Journal of Psychology*, 1958, Vol. 71, pp. 557-62.

Gibson, J. J. *The Senses Considered As Perceptual Systems.* Boston: Houghton Mifflin, 1966.

Halmos, P. R. *Measure Theory.* Princeton: Van Nostrand, 1950.

Hartmanis, J., and Stearns, R. E. *Algebraic Structure Theory of Sequential Machines.* Englewood Cliffs, N.J.: Prentice-Hall, 1966.

Hermann, H. T., and Kotelly, G. E. "An Approach to Formal Psychiatry," *Perspectives in Biology and Medicine*, Winter, 1967, Vol. 10, No. 2.

Hunter, J. M. L. "Tactile-kinesthetic Perception of Straightness in Blind and Sighted Humans," *Quarterly Journal of Experimental Psychology*, 1954, Vol. 6, pp. 149-54.

Juurmaa, J. *The Ability Structure of the Blind and the Deaf.* (Final Report, July 1, 1960-May 31, 1965.) New York: American Foundation for the Blind, 1968.

Kelley, J. L. *General Topology.* New York: Van Nostrand, 1955.

Lea, W. A. *Measurement of Syntactical Complexity of Formal Expressions.* Unpublished dissertation for degrees of Master of Science and Electrical Engineering, MIT, August, 1966.

Mackay, D. "On Comparing the Brain with Machines," *American Scientist*, 1954, Vol. 42, pp. 261-68.

Piaget, J. *The Child's Conception of Number.* New York: Norton, 1965.

Piaget, J., and Inhelder, Barbel. *The Child's Conception of Space.* (Trans. by F. J. Langdon and J. L. Lunzer.) London: Routledge & Kegan Paul, 1963.

Piaget, J., Inhelder, Barbel, and Szeminska, Alina. *The Child's Conception of Geometry.* (Trans. by E. A. Lunzer.) London: Routledge & Kegan Paul, 1960.

von Senden, M. *Space and Sight.* Glencoe, Ill.: The Free Press, 1960.

Underwood, B. J. *Experimental Psychology.* 2nd ed.; New York: Appleton-Century Crofts, 1966.

Worchel, P. "Space Perception and Orientation in the Blind," *Psychological Monographs*, 1951, Vol. 65, pp. 1-28.

Yilmaz, H. *Perceptual Invariance of the Psychophysical Law.* Prepub. Rep. 1967, NASA, ERC, Cambridge, Contrast NAS-12-129.

BRAILLE EMBOSSING AND TRANSMISSION EQUIPMENT*

Ray E. Morrison

CODES

To transmit braille information to a distant point it first must be expressed as a discrete code. This was done initially at the Data Processing Conference on Braille Codes at MIT on March 17-18, 1961. Later, at the MIT Conference on June 28, 1965, the coding was modified slightly to conform to the American Standard Code for Information Interchange (ASCII) pattern.

Braille intelligence is contained in levels 1 through 6 of the code corresponding to dots 1 through 6 of the braille cell. Level 7 is for control purposes and level 8 is for parity checking. Control code and parity check bits can be added as desired without affecting the basic braille information.

Figure 3 lists the braille code in its present form.

In this form braille intelligence can be transmitted locally or to a distant point using standard teleprinter equipment and standard transmission methods. This is covered in the next section.

*This paper was presented at the Perkins Braille Conference, Watertown, Massachusetts, May 18-19, 1967.

The following braille equipment designs are original developments by the author and are declared in the PUBLIC DOMAIN for use by anyone, for the benefit of the blind.

The author is a supervising engineer in the Dataphone and TWX District of the Suburban Engineering Department of the Illinois Bell Telephone Company.

The author wishes to thank Messers. E. W. Kettnich, R. A. Larsson, C. D. Seidler, and R. R. Smessaert of The Teletype Corporation for their helpful advice and encouragement in the development of the braille tape embosser and Mr. Oldshaw of the Allen Paper Company and the Paper Manufacturing Company for their help in solving the braille paper tape problem.

TRANSMISSION SYSTEMS

Coded braille can be produced by many methods: translation from 5-level Baudot or 8-level ASCII codes, from 6-level compositor or teletypesetter tapes, from punched cards or magnetic tape or direct from a braille-coded keyboard.

The latter system was the subject of a paper presented at the 1963 NEC and was published as a copyrighted article in the December, 1963 issue of *RTTY Magazine*.

The standard 8-level code bars of a Model 29 Teletypewriter keyboard were replaced by code bars coded for braille. A study of the braille-cell dot arrangement disclosed that a dot 6 could be added to 19 of the characters to produce a new character. For example: "A" is dot 1, adding dot 6 produces "CH." "THE" is produced by adding dot 6 to "S." Thus the "lower case/upper case" shift feature of the standard typewriter can be used to reduce the overall number of key-levers needed. The shift key for adding the dot 6 is labeled AUX and has its associated code bar coded to prevent the false addition of a dot 6 to keylevers to which this feature does not apply.

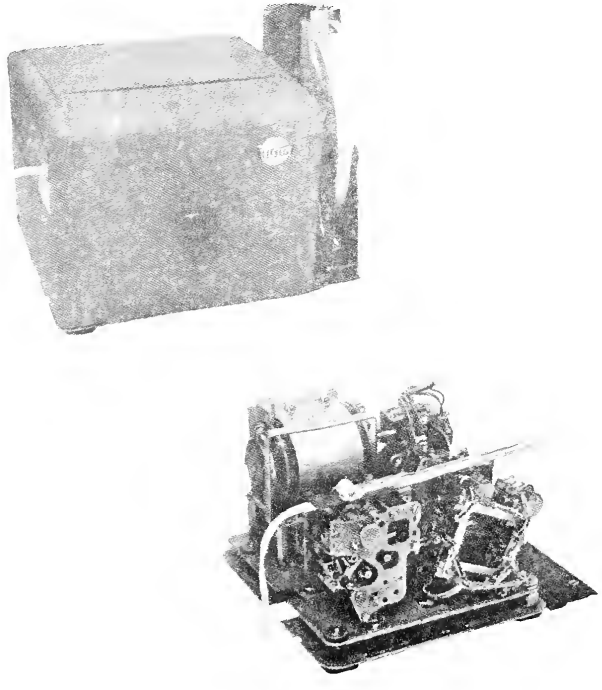

FIG.-1

Figure 1. Tape Embosser

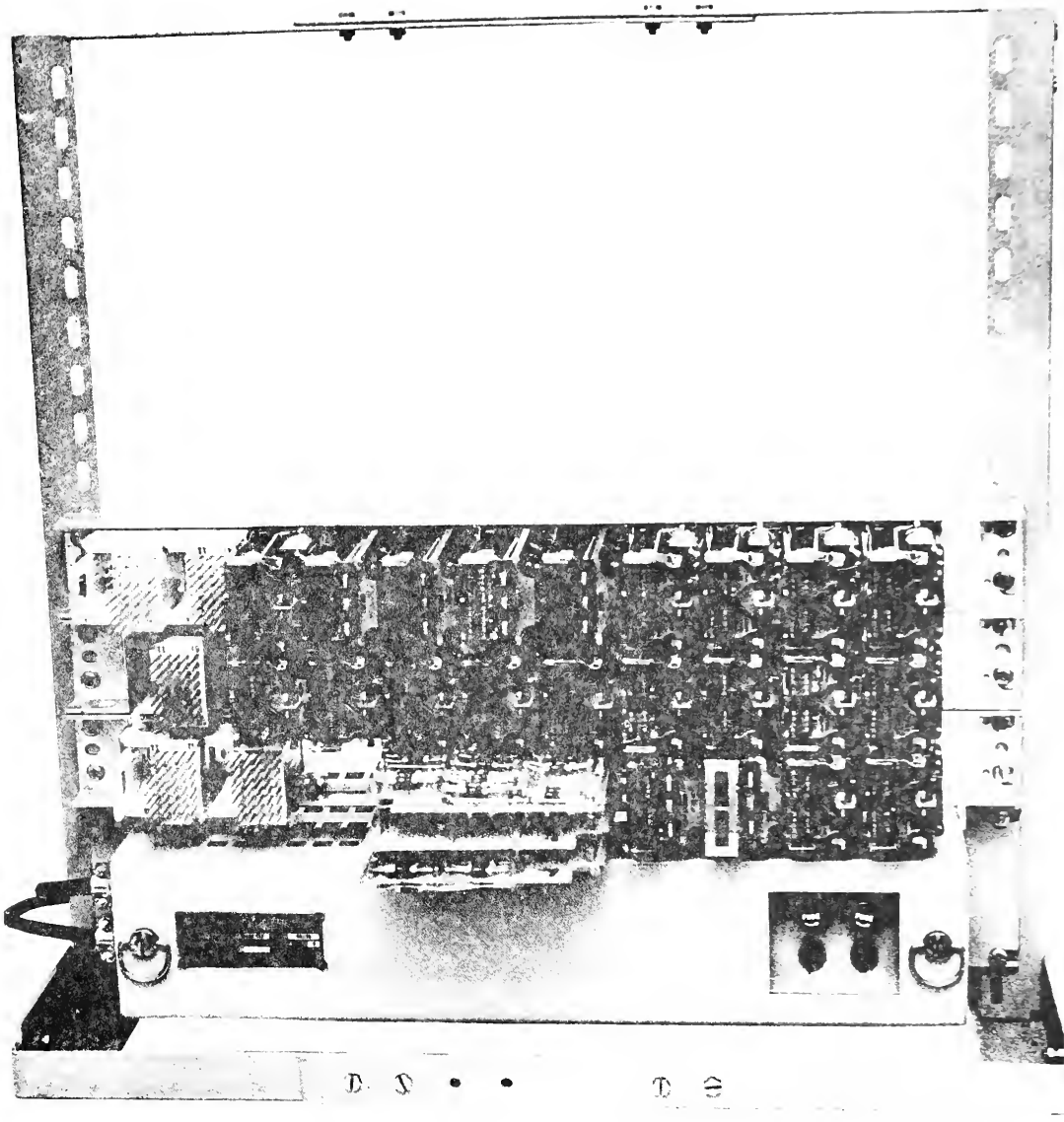

FIG.-2

Figure 2. Control Equipment

FIG.-3

BRAILLE CODE

REVISED 6/28/65 (M.I.T. CONFERENCE)

OCTAL	CHANNELS	CHARACTER GR 1	CHARACTER ADDL GR 2	OCTAL	CHANNELS	CHARACTER GR 1	CHARACTER ADDL GR 2
				240	-----6-8	CAPS	
201	1------8	A		41	1----6--		CH CHILD
202	-2-----8	COMMA	EA	42	-2---6--		EN ENOUGH
03	12------	B	BUT	243	12---6-8		GH
204	--3----8	APOST		44	--3--6--	HYPHEN	COM
05	1-3-----	K	KNOWLEDGE	245	1-3--6-8	U	US
06	-23-----	SEMI	BE BB	246	-23--6-8	QUO QUES	HIS
207	123----8	L	LIKE	47	123--6--	V	VERY
210	---4---8	ACCENT		50	---4-6--	ITALICS	PREFIX
11	1--4----	C	CAN	251	1--4-6-8		SH SHALL
12	-2-4----	I		252	-2-4-6-8		OW
213	12-4---8	F	FROM	53	12-4-6--		ED
14	--34----	/	ST STILL	254	--34-6-8		ING
215	1-34---8	M	MORE	55	1-34-6--	X	IT
216	-234---8	S	SO	56	-234-6--		THE
17	1234----	P	PEOPLE	257	1234-6-8		AND
220	----5--8		PREFIX	60	----56--	LETTER	
21	1---5---	E	EVERY	261	1---56-8		WH WHICH
22	-2--5---	COLON	CON CC	262	-2--56-8	PERIOD	DIS DD
223	12--5--8	H	HAVE	63	12--56--		OU OUT
24	--3-5---	ASTER	IN	264	--3-56-8	UNQUOTE	WAS BY
225	1-3-5--8	O		65	1-3-56--	Z	AS
226	-23-5--8	EXCL	TO FF	66	-23-56--	PAREN	WERE GG
27	123-5---	R	RATHER	267	123-56-8		OF
30	---45---		PREFIX	270	---456-8		PREFIX
231	1--45--8	D	DO	71	1--456--		TH THIS
232	-2-45--8	J	JUST	72	-2-456--	W	WILL
33	12-45---	G	GO	273	12-456-8		ER
234	--345--8		AR	74	--3456--	NUMBERS	BLE
35	1-345---	N	NOT	275	1-3456-8	Y	YOU
36	-2345---	T	THAT	276	-23456-8		WITH
237	12345--8	Q	QUITE	77	123456--		FOR

FUNCTION CODE

101	1-----7-	CR & LF	300	------78	SPACE
143	12---67-	BELL	303	12----78	PAGE
			305	1-3---78	LINE SPACE
			377	12345678	RUBOUT

PROPOSED FUNCTION CODE

123	12--5-7-	STOP	321	1---5-78	START
167	123-567-	SHIFT	377	ABOVE	UNSHIFT

Figure 3. Braille Code

Since in braille the numbers are represented by the first ten letters of the alphabet preceded by a # sign, the top row of the standard typewriter keyboard is available for the special braille punctuation and composition signs.

Figure 5 illustrates the author's braille keyboard layout based on the standard typewriter and this easy-to-modify method using a Model 29 or the new Model 35 Teletypewriter. Modification costs are minimal compared to other layouts the author has seen. (Code bars cost 11 cents and keylevers, including engraving, average 50 cents each.)

Output from the keyboard signal generator is in the form of a braille code 8-level 11.0-unit serial signal similar to that produced by the standard 8-level ASCII keyboard. This operates a monitor printer and a paper tape reperforator in a local circuit and when transmitted over wire line or radio circuits will operate an embossing unit or tape reperforator at a distant point.

These circuits can be Bell System or independent telephone company slow speed (60 to 150 wpm) data lines. If the perforated tape is used for input, transmission can be over the higher (1050 wpm) Dataspeed circuits.

Various transmission layouts are shown in Fig. 4. The data sets used for distant transmission will depend on local telephone company conditions. For transmission over nontelephone private lines the Stelma, Inc. (Stamford, Connecticut) data subsets models 1BR and 1BT can be used. These subsets convert the local dc circuit to ac frequencies for distant point transmission. Also these sets can be hubbed for multiple point transmission.

The local monitor printer is of interest. A standard 8-level tying unit is used with the regular type pallets in the type box replaced with special braille printing pallets. See Fig. 7 for full braille monitor printing and Fig. 8 for a combination letter and braille contraction printing.

An additional feature of this system is that individual contacts can be added to the regular hand embosser keylevers. The resulting multiple wire output is fed through a distributor to produce an 8-level 11.0-unit serial signal as above. This feature is for those braillists who are more "at home" on the Perkins.

Note: This system can be used to produce other than English braille. Figure 6 illustrates a keyboard developed and coded for French (Canadian) braille.

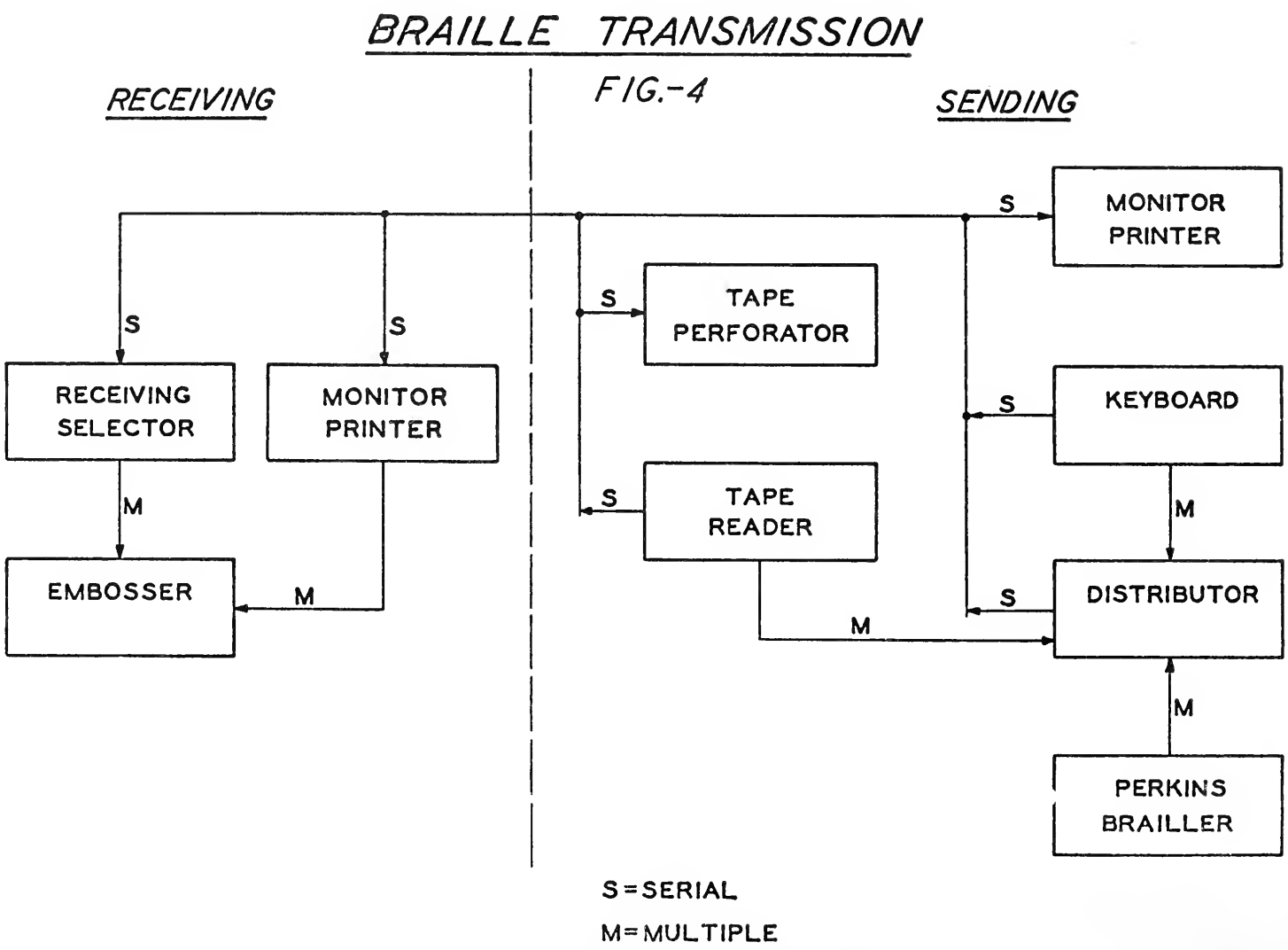

Figure 4. Transmission Arrangements

FIG.-5

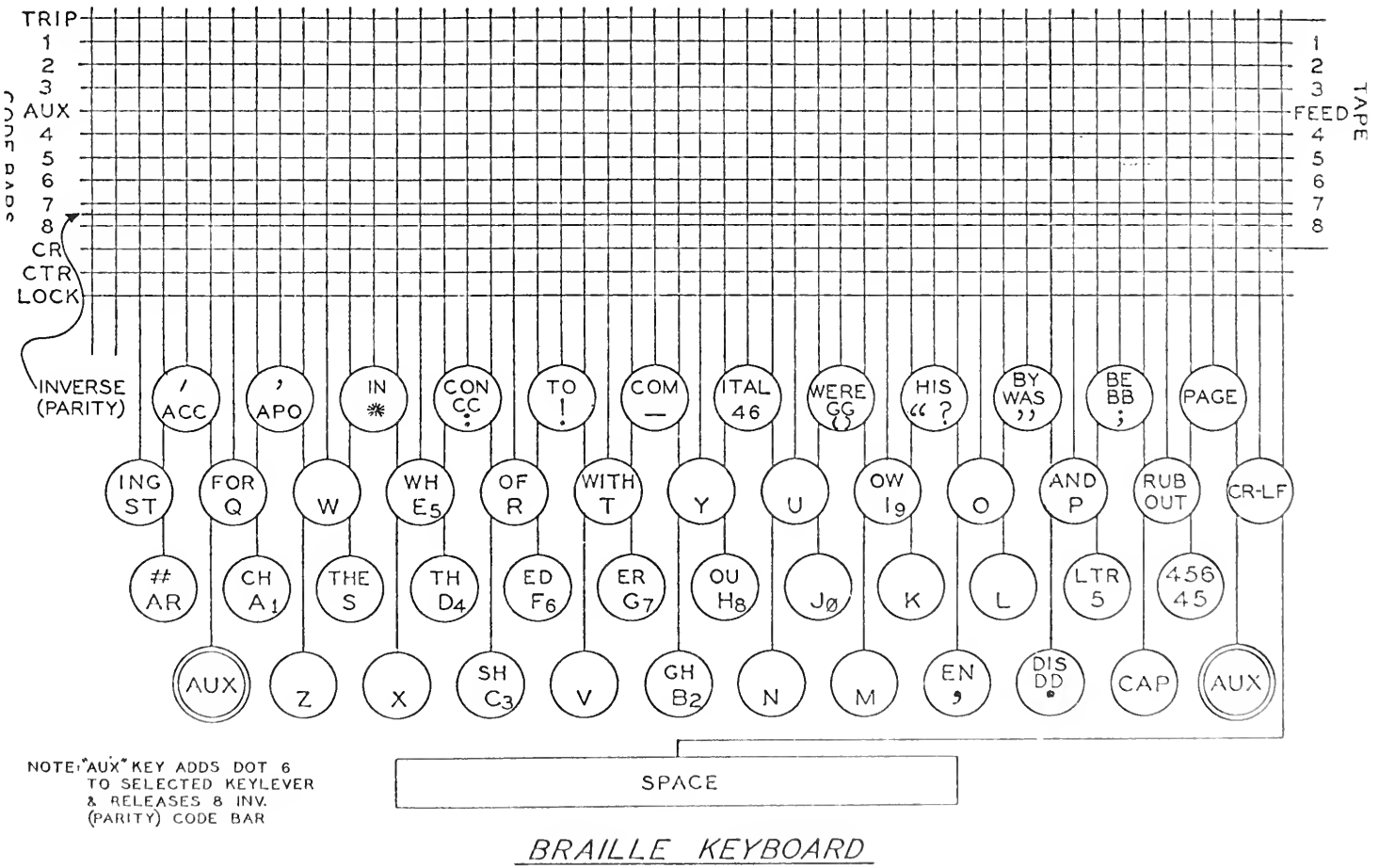

BRAILLE KEYBOARD

Figure 5. English Braille Keyboard

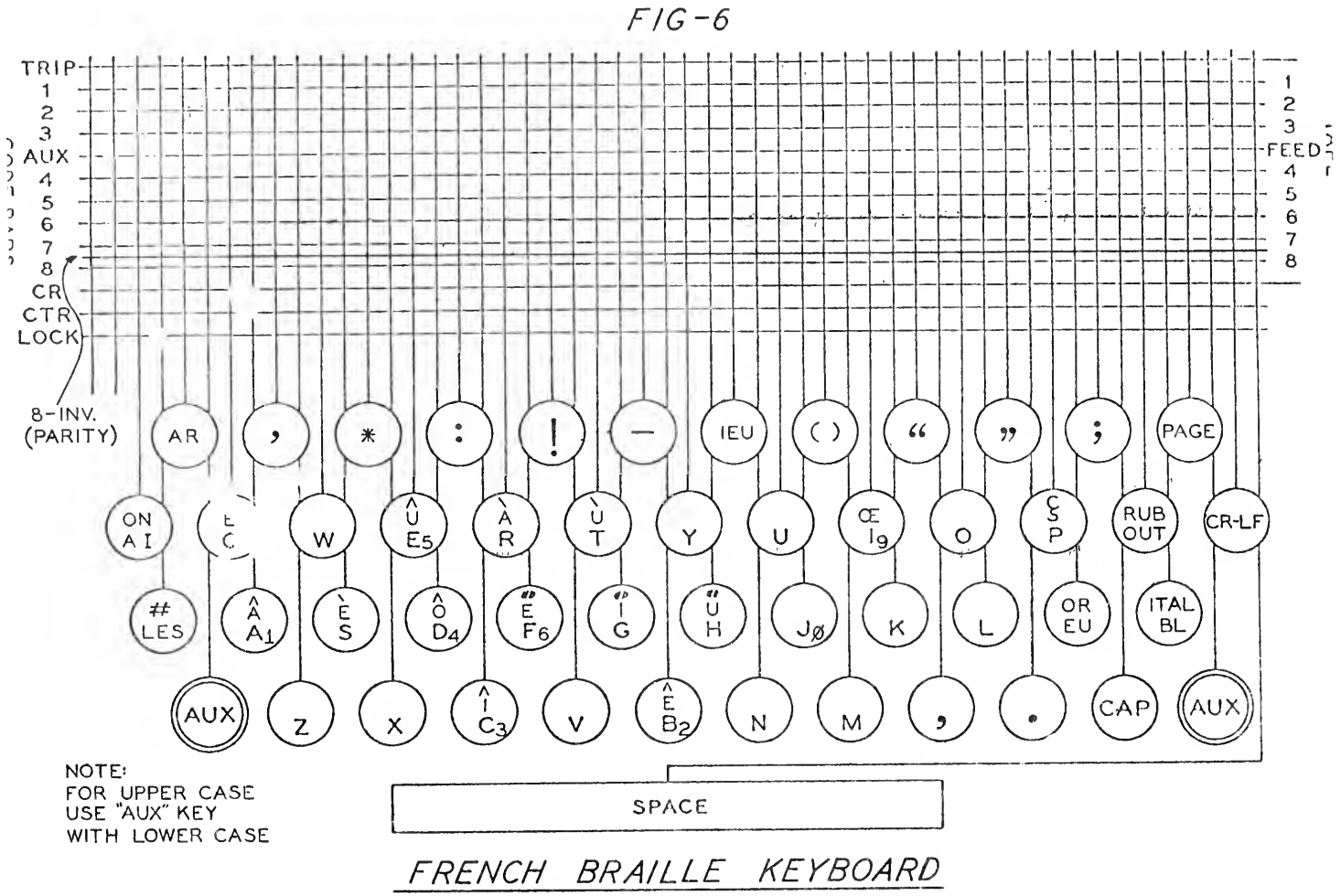

Figure 6. French Braille Keyboard

FIG.-7

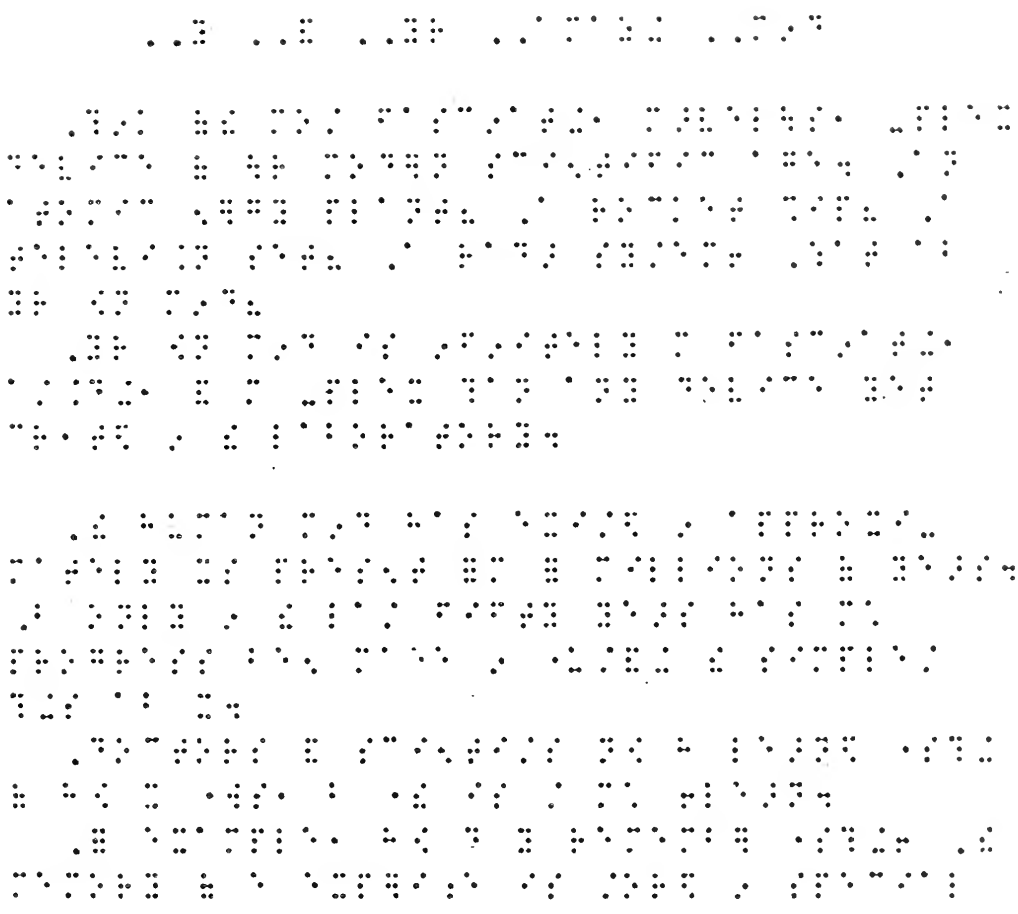

Figure 7. Full Braille Monitor

FIG.-8

```
..Y ..& ..YR ..AMAZ:: ..MIND

.THINK OF:: MOST FASCINAT::· MARVELOUS· ..PLEX
DEVICE OF OUR MODERN SCIENTIFIC AGE·: .AN
ATOMIC ENERGY PLANT:. .A ROCKET SHIP:. .A
TELEVI:N SET:. .A RADAR SYSTEM:· .WHAT AB
YR OWN MIND:.
.YR OWN MIND IS INFINITELY M FASCINAT::·
AST:D::· & M ..PLEX THAN ANY DEVICE YET
CR·TED IN :: LABORATORY·:

.:: HUMAN MIND HAS EXISTED IN APPROXI..
MATELY XS PRESENT ::M :: MILLIONS OF YEARS·:
.B ONLY IN :: LAST FIFTY YEARS HAS MCH
PROGRESS BEEN MADE IN ·UST&:: :: SIMPLEST
TH::S AB X·:
.DOCTORS & SCIENTISTS NOW H LEARNED ·STH::
OF HOW X ·WS· B ·:: IS ST MCH :·LEARN·:
.:: EXAMPLE· HOW D Y REMEMBER ·STH::·: .::
MEMORY OF E EXPERI:E IS STORED IN SPECIAL
```

Figure 8. Letters and Contractions Monitor

PAGE EMBOSSERS

The only page embosser announced to date was developed at MIT by D. W. Kennedy for his Master's thesis in 1963. This was a prototype model and is not available commercially.

The author has used a Perkins and a Lavender hand embosser equipped with push solenoids to produce page braille copy electromechanically. This is not very satisfactory, for the carriage return and line feed operations must still be performed manually.

Another disadvantage is that the standard typewriter or teleprinter line averages 72 characters while the braille line has a maximum of 38 cells.

TAPE EMBOSSERS

To eliminate the restriction of the number of braille cells on a line, an embossed-tape braille system was developed. This system was first described in a copyrighted article in the May, 1964 issue of *RTTY Magazine*.

Originally this system was designed to enable a blind radio amateur to "converse" by radio teletype (RTTY) with his fellow hams. Since the visually handicapped amateur can use the standard teleprinter keyboard for transmitting, translation to braille is necessary only for receiving. A regular "Banks" tape braille writer was used for embossing by operating the keylevers with solenoids.

Translation of the 5-level Baudot radio code to the 8-level braille code was done by a diode matrix connected to a code read-out source from the 5-level code. The read-out device can be a code sensing selector and a relay tree or the "stunt box" of a teleprinter.

Further development on the tape embosser resulted in the use of a Teletype Corporation LARP multiple wire reperforator with the punch block replaced with a braille embossing block.

Figure 1 pictures the prototype model and Fig. 2 shows the relay tree, diode matrix and the relays for translating and controlling the 5-level Baudot or 8-level ASCII signals. (Teletype Corporation Models 28 or 35 respectively.)

As presently developed this equipment can be added to a DATA-PHONE TWX, newswire or financial market reporting line to produce an embossed braille-tape copy of the regular "hard" copy of the message. This is in grade 1 braille (letter

for letter) but includes the insertion of the # sign before numerals and the LTR sign in mixed numbers and letters. All equipment except the special embossing block are off-the-shelf standard Teletype Corporation units.

SEMI-AUTOMATIC TRANSLATION—GRADE 1 TO 2

During the development of the control circuits for the tape embosser a method of translating full spelling to grade 2 braille without the use of a computer was envisioned.

Essentially, a trained braillist scans the book or manuscript and underlines the contractions to be translated.

Then, a typist, who does not need to be trained in braille, types the text, operating a "Contraction" key before typing the underlined part and again after typing the last letter of the contraction. (With the model 35 the "ALT MODE" key can be used as the contraction key.)

For example:

It is used to* prevent flashover between adjacent/

wipers during vibration or shock and to* obtain

higher than/ normal dielectric strength.

(*No Space, / end of braille line)

An expanded translation and control system similar to the tape brailler above, will produce a grade 2 perforated paper tape output. This can be used locally for monitoring and producing punched cards for metal embossing plates and can be transmitted to a distant point for use there.

It is expected that this system layout will be completed at an early date and at a cost very considerably less than that of a computer.

ELECTRONEUROPROSTHETICS: HISTORY AND FORECAST

Dr. Wendell J. S. Krieg
Biostructure Department
Northwestern University

The history of scientific neuroanatomy may be briefly summarized as following a caudocephalad differentiation. The tracts of the spinal cord were worked out in the closing decades of the nineteenth century, the structure of the brain stem and cerebellum was elucidated in the first two decades of the twentieth, largely by Ramon y Cajal. But because the Golgi method is of little use in the diencephalon, Cajal did not study it much, so tha thalamus received small attention until about 1929. During the next two decades its component nuclei in mammals were systematized and they were seen to be topically related to specific areas of cerebral cortex, where the work stopped.

The intrinsic structure of the cerebral cortex was described by Ramon y Cajal in the early years of this century, and the subject has rested since then where he left it. The many anatomical functional-organ areas composing the cerebral cortex were stipulated by Brodmann before 1906, confirmed by von Economo in 1925 and confused by several writers since that time.

Though our knowledge of the intrinsic structure and areal subdivisions of the cerebral cortex was crystallized early in the twentieth century, information on the neural connections of the various areas has been conspicuously lacking until very recently, and still has attracted little attention. Neuroanatomists have been induced by its vastness, the irregularity of its contour, and its deceptive uniformity of structure to avoid it and to continue to harrow previously plowed fields of lesser acreage. Neurophysiologists have been discouraged by its irregularity of response or the apparent silence of some regions, while clinicians never tire of making broad jokes about its dispensibility. This defection should leave its study to the psychologist, who is certainly dependent on an understanding of cerebral cortex, but the latter group have until recently shown a strong dislike toward wetting their fingers in blood or in xylene.

More recently workers on evoked potentials have demonstrated the most exquisite specificity of individual cells to localization and integrative functions in the sensory receptive

areas. At the same time each cortical area has been shown to have its characteristic pattern of specific connections, arranged in an orderly manner.

It is clear now that there is tremendous specificity and significant detail in the cerebral cortex. Other major areas of the medical sciences have been explored and the law of diminishing returns has set in with some. Many neurological, psychological and psychiatric problems lead to cerebral cortex and are stopped against the wall of our ignorance.

If there is any subject in medical science, indeed in all science, more challenging today than the cerebral cortex, I would like to know what it is. The reason we can give no answers about the true nature of paranoia and schizophrenia is that we don't know enough about the cerebral cortex, just as it would have been impossible in the thirteenth century to give any sound cosmology. There were just fundamentals about the universe we now know that they were not aware of then.

Having been for many years fascinated by the cerebral cortex, I undertook the analysis of its connections in 1944, when I came to Northwestern University Medical School for full time research. As I got into the subject, I became impressed with how vast is the field and to what extent untried procedures could be applied to its study. The connections of the cerebral cortex of no animal had been subjected to systematic tracing and mapping, though the redoubtable Marchi method had been available for decades.

With man as the ultimate, I began with the rat, determined its cortical areal units and traced connections in degenerations after small experimental lesions. Then I proceeded to the monkey, and am now attempting to extrapolate to man.

During these twenty years I determined cortical areas and traced connections in degeneration material in rat, monkey, and man. Becoming more immersed in the cerebral cortex, I dreamed of a great expansion of the Institute of Neurology at Northwestern, of which I was then director, and made formal proposal to my dean of the aggregate plan in 1949. There were two aspects to the plan: research and therapy. The research would develop the therapy, and the therapy would justify the research.

It might seem that the details of such a plan would be outdated after twenty years, but recent cortical research has, with few exceptions, though widespread and sometimes intense, not been particularly revolutionary. Stereotaxis had

been revived by Ranson and had been used intensively on the brain stem, especially by Magoun and co-workers at Northwestern Medical School, utilizing until latterly, the original Horsley-Clark design. There was no stereotaxic atlas of the human brain, and little reference material for animals.

My plan was to carry sterotaxy to the human brain for therapy, controlled by elaborate devices. The value of destructive lesions was seen for relief of intractable pain, for a more specific substitute for frontal lobotomy, for control of epilepsy, tremor, spasm, muscular tonus and abnormal movements. Also following upon the work of Hess in Zurich, permanent electrodes were to be set to furnish tonic stimuli to control autonomic imbalance, visceral function, and sleep.

Stereotaxic machines on new principles were also devised. Some of these are now in commercial production:

1. The first small animal machine, with a single arm, not a gantry;

2. The stereotaxic duplicator, which depends on a matching of a brail electrode yoked with a pointer to a positioned brain section, using pivots and sway bars;

3. The quadruple stereotaxic machine, which has four independent tridimensional assemblies which do not interfere with one another.

Planned out, but not actually produced were a universal machine which would permit as many as twenty independent assemblies to be used at one time, a machine on a 3-D pantographic principle, and one using Selsen controls.

Several methods of visualization and control were worked out. The first is direct microscopic control. Unshrunk sections are viewed on a microscope stage whose movements are linked electrically by Selsen control to the advancing mechanism of a stereotaxic assembly over the brain of an animal or man. Each movement of the section on the microscope is followed by the slave machine over the brain, the actual penetration being held on trigger. This enables one to follow the relations of the electrode while operating, routing out a nucleus, and such. With the quadruple machine, there were to be four microscopes and control slides. By the same token, there could be 20 microscopes for the 20-unit machine if required, though perhaps no one would set up an experiment with that many variables.

The second utilizes the 3-D pantographic principle for reduction of range of movement, a Selsen type of control was to be utilized for enlarged graphic slice reconstructions on thin panels drawn out of a rack as needed, each being placed at the proper interval, taking the magnification into consideration. An enlarged model of the operating electrode was to be the pointer.

For the third method, slide projectional control, the original manuscript will be quoted.

> "An enlarged image of the microscope slide itself, or of a slice reconstruction, might be projected to a screen, but the anteroposterior plane here would have to be set manually. The size of the brain can be corrected by altering the size of the image. Brains which are systematically narrow or broader than the standard could be corrected by the introduction of a cylindrical lens of the proper caliber into the projector. Unsystematic deviation, such as asymmetry, could be corrected by reflection for adjusting the contour of portions of its surface to cast a corrected reflection of any part, like the distorting mirrors used in amusement parks. Thus it might be possible to operate stereotaxically on patients with neoplasms or hematomas which have crowded the brain substance aside."

The fourth method represented the ultimate in visual control. A transparent model of the brain was to be made with internal structures represented as tinted hollow plastic shells and the like. This was to be filled with a fluid charged with widely separated colloidal particles, made visible by a light beam in the dark room. A thin plane of light represents each of the three planes of the machine and corresponds in position in the model to its relation to the brain at any instant. Where any two planes cross, a bright line shows, with the point of triple crossing brightest of all. Control is thus visual, no numbers being used. The machine is, of course, slaved to the light planes by Selsen control. If the matrix could be gelatinous and the model immersed in a transparent tank, the distance between any pair of its sides could be adjusted to compensate for variations in shape of individual brains. Binocular fusion of separate images of the model and the X-ray of the patient's head would obviate taking measurements. All this was my reaction to the universal reference to any sterotaxic apparatus as the "Horsley-Clark" machine, as though created by divine fiat, to be transmitted unchanged down the generations, and began with wanting to show that sterotaxic machines on many principles are possible.

The second main research thrust was to be the cortex scanner. "We must know exactly where the various impulses are received on the cortex, how they are handled within the various areas, and how they are integrated into complex reactions. The only way to do this properly is to obtain a simultaneous picture of the activity of the various areas of the cortex from instant to instant, and of how impulses are propagated in time and space over the cortex." At that time Lilly was adding more channels to his multiple assembly of cathode ray tubes.

It was felt, that. . .

> "the principles of television might be applied to the brain. Onto the exposed surface of the monkey's brain a plate would be applied, curved to fit the brain, and provided with a large number of tiny terminals on the surface of the brain. These terminals have been arranged in such a way that they are successively contacted in an orderly and prearranged manner by a rapidly moving scanning device. Any minute change in electrical activity alters the electrical record when the contact reaches that terminal. All that is necessary now, is to have this circuit synchronized with the screen-scanning device so that activity is recorded on a screen, laid out in such a way as to present the surface of the brain. Thus activity induced in the brain causes a change in potential which is transmitted to the proper spot in the screen, resulting in a local glow of varying intensity and distribution."

> "At human operations, when a large part of the cerebrum is exposed, the screen could be photographed by motion picture. Discrete stimuli could be sent into the sense organs, or to loci on the brain by mechanical devices in a prearranged manner, and the screen photographed with the stimulus numbers recorded on the film. The whole integrated record could be taken in a few moments, to be analyzed at leisure."

> "Such an instrument would insure progress in knowledge of the intimate working of the brain, furnish localizing data useful in adapting sensory prosthesis, discover defective connections, or locate abnormal circuits, as in epilepsy."

The next year after the proposal, Michaels, a master's candidate at Northwestern's College of Engineering, demonstrated that an image-orthicon tube whose surface conformed to the surface of the brain could be used to pick up variable external potentials of that order. The use of an image-orthicon tube, synchronized with a TV projection tube would simplify the necessary hardware.

SENSORY PROSTHESIS

By far the most significant innovation in the 1949 plans for the neurological institute was the replacement of interrupted sensory connections to the cortex, by means of patterned electrical stimuli: sensory electroneuroprosthesis.

The application of electroneuroprosthesis that, as subsequent events proved, evoked the most interest requires laying some background.

Now, injury to the retina or the optic pathway results in blindness, because all image formation reaches consciousness in the occipital pole of the cerebral cortex. Dead optic fibers never recover, even though severed nerves in most other places can regrow. We know, and knew in 1949, that the visual field is laid out in an organized manner on the surface of the occipital cerebral cortex, that exactly one half of the visual field is represented in each side, that the central discriminatory part is at the occipital pole, enormously expanded, while the peripheral part of each half field is folded into the calcarine fissure of the medial surface. Presumably, if a gentle electrical stimulus were applied at some point on the visual cortex a spot of light, a phosphene, should be fancied, corresponding in its apparent location to that part of the visual field to which it normally responds. If a pattern of points were stimulated, multiple points of light should be sensed, indeed if a grillwork of electrodes were in place, an arrangement might be made to outline, say, the letter "F". Sequentially, they might spell out a message, so that imagery and information might thus be conveyed directly to the cerebral cortex, even to the blind.

If an electrode were activated by the current generated by a photoelectric cell receiving its light from a restricted area, a blind person should be able to orient with relation to a window, a lamp, or the sun. If an array of photocells were directed towards various points in the visual field, some perception of the outer world might ensue, the information-bearing product being factored by the number of separate circuits in the apparatus and the degree of discrimination possible from electric stimulation of the surface of the visual cortex.

Indeed, if the last factor proved to be quite high, that is, if closely placed electrodes could be discriminated, it ought to be possible to simplify the apparatus by sweeping a single photocell across the visual field, synchronize this with a travelling switch, perhaps a cathode ray, and the result would be a useful image with some detail. Of course,

the outer world is highly distorted as it is mapped out on the visual cortex, but the basic pattern of this is known, while the details of electrode arrangement could be rearranged subjectively by the blind patient as he uses the machine, such as matching his image components with a vertical line in space.

Though it was not known how many points could be discriminated in practice, the device would be of benefit at any limitation of fineness. Even the perception of on-off light would be useful to a blind person.

Similarly, the auditory cortex might be stimulable by electric current. This should be useful to a deaf person, if only to sense warning sounds. The auditory area is on the floor of a buried fold of cortex at the side of the cerebrum. It had not, and still has not been, thoroughly studied experimentally, but there was work to show that the tonal scale was laid out along its surface, the high tones forward, the low tones behind. Nonminimal stimuli to the general region of areas 41, 42 or 22 produce sensations interpreted as ringing, chirping, humming, buzzing or booming. Presumably, a careful study would show localization of pure tones, possibly some localization for timbre.

Thus, it would seem that electrical stimulation of the auditory receptive area of a deaf person would produce the sensation of sound. It is an easy matter to switch on an electric current by resonance of any given pitch or range. If an array of electrodes on separate circuits were placed on the auditory receptive area, a little experimentation by the patient would determine which pitch corresponded to each station.

Experiments at Bell Telephone Laboratories before 1933 had shown that the human voice could be interpreted if transposed into some half dozen spaced pure tones produced by combination of tonal ranges, so the input need not be complex, unless music appreciation is the goal.

While the adult who becomes deaf in later life is not as handicapped as a blind person, and adult deafness is seldom absolute, the congenitally deaf child also remains speechless, because he hears no words to imitate. If auditory electroneuroprosthesis were utilized only during a brief speech-training period in childhood, its effects would be permanent as regards speech. Though returning to deafness once the apparatus was removed, he would possess the faculty of speech all his life, just as in cases of adult deafness.

It is possible that the tones and timbres are laid out in the auditory receptive area in a minutely organized manner, and that a multi-electrode plate could be applied.

The tonal affinity of the cortical point each electrode touches could then be worked out by trial and corrected to a resonator for that individual sound. No scanning is necessary with auditory prosthesis, no matter how complex, and the tonal scale is one-dimensional, rather than two-dimensional, like the monocular visual field.

The value of somesthetic prosthesis is dubious, as it would seem to be of little value to reproduce the sensations from an amputated limb. Nevertheless, here we are on sure ground, for the practicability of producing subjective sensation by stimulation of a cortical receptive area has been amply demonstrated before 1949.

However, the possibility of exploration of the vast areas of the cerebral cortex not directly connected with sensory afferents is an intriguing one. Let us quote from the 1949 application.

> "It is possible that electrical impulses representing sensory stimuli may be carried to undifferentiated cortex, and this material analyzed by the trial and error method of the infant cortex. A fascinating field from the research standpoint is the enlargement of sensory range by applying modalities of stimulation or varieties of data not ordinarily directly perceived by man. The examples that come immediately to mind are suprasonic vibrations, Hertzian waves, and ultraviolet rays. Such unusual stimuli are not to be applied directly to the brain, but transvested into electrical stimuli of appropriate intensity for the cortex to respond. Who knows to what degree the intelligence of man or his knowledge of the universe may be broadened by piping to the brain modalities of data which are not appreciated by any of the conventional senses?"

MOTOR PROSTHESIS

After severance of a nerve trunk, the muscles which were supplied by the nerve paralyze. They may still be stimulated, however, by electric current from the skin over them, and if regularly stimulated over the point where motor endings are concentrated may be kept indefinitely from atrophy. It ought to be possible to place electrodes over de-enervated muscles, and by activating them in proper sequence and intensity to produce useful movements. For symmetrical movements or walking, the stimuli could be made from normal myograms during the movement desired. It might be more sophisticated to use buried receivers, each tuned to a single frequency (the original prospectus called for secondary coils), to avoid piercing the skin over the deeper muscles by wires. This is peripheral electroneuroprosthesis.

In conditions where the motor nerves and muscles are normal, but the central organization and control is at fault, resulting in faulty muscle tonus, it may be possible by placing retention electrodes at proper control points, to inhibit or exalt tonus or activity. The central control of tonus is built up at subcortical levels and is much better understood than the processing of sensory material. Experimentally implanted electrodes in animals would forestall the necessity of basic experimentation in man. Human and animal mechanisms are known to be quite similar here.

The foregoing proposals are a shorter version of the plan offered in 1949, with care to avoid anachronisms in thinking or taking advantage of afterknowledge. I believe both electricians and clinicians will agree that it was worthy of serious study and that some parts at least would merit support. It was presented to the Dean of the Medical School at that time, who took it seriously enough, and referred it to the two clinical departmental chairmen, who should be most entitled to pass on it. They promptly killed it. One, qualified by saying, "Well, yes, perhaps in a hundred years"; the other saying, "Do you think neurosurgeons want to go around drilling little holes in people's skulls?"

Application has been made to two more deans in lineal succession, with a resound like dropping a rose petal in the grand canyon. It has been expounded to three successive chairmen in my department, and fallen dead there. It has been presented to the first three successive directors of the Institute of Neurological Disease and Blindness without any action. The first said, "We know many of these things are being done around the nation now." The second didn't last long enough after the proposal. The third said it seemed like the sort of thing the Easter Seals program ought to take up.

It happened that within a few months after the proposal was written, I had occasion to give the presidential address for our local chapter of Sigma Xi. So I popularized it a bit under the title, "New Horizons in Brain Research." The talk was covered by a routine press release. Lo and behold, next day there was an article about it in nearly all major newspapers, usually on the front page! A few days later it was in a number of newspapers overseas. Then came the columns, syndicates, and an article in Time magazine. A considerable volume of fan mail surged in, mostly from afflicted people who were willing to be "guinea pigs" as they usually put it, or with blind or deaf relatives. There were suggestions from amateur electricians, imaginative forecastings, crackpot letters and even paranoid ravings about secret rays, mind control and the like. But no checks. I spent my research time for the rest of the academic year answering letters.

At irregular intervals during the years that followed, the plan was revived, either as a result of events, or proddings by colleagues. Neither blindness, rehabilitation, nor electronics is in my usual line of work, and I continued to work on the cortical connections.

Having been asked to give a centennial address for a university in February 1968, I wanted the subject to be the most important thing I had to say. My address was entitled, "Electroneuroprosthesis -- Tomorrow?" It was a detailed scientific reappraisal of the subject in light of whatever has been learned and thought since 1949.

The main issue seemed to be visual prosthesis, so it received the most emphasis. The possibility had always dominated the popular interest, since the first publicity. If it could be brought about, the other prostheses and the more pure research would be swept along in its wake. So in that address a series of searching questions was asked, and replied to, to test its practicability. Would punctuate stimuli be seen as localized points or glows? We have long known that the quadrants of the visual field and of the macula are separate in the visual system all the way to the cortex. But are the fibers scrambled within these subunits? Talbot and Marshall have shown by evoked potentials in the monkey's cortex after localized light flashes, that each response area is localized and discrete.

Could the electrode array be held permanently in place? Retention electrodes have for long been used in animals from rats to chimpanzees. The human skull is much thicker and bone healing will glue in the fastenings. No trouble is anticipated here.

But could a foreign body be tolerated in contact with the brain for long periods? Fischer showed that deep electrodes, if of stainless steel, can remain in the brain for long periods without damage of a single cell beyond the path it cuts. Delgado's rather large deep electrode assemblies showed only a thin growth of glia cells over the surface. Here the pia need not even be pierced and the electrode could end as a button.

Possibly periodic stimulation will in time render the neurons unexcitable or kill the surrounding cells. John Lillie found that by using a quick positive and negative wave with a short pause between, 168 million stimuli over 16 months did not weaken the response. The stimulus parameter can be determined by experience. Apparatus has been developed to deliver any kind of stimulus. One only has to twist the knobs.

How could a large number of electrodes be held in place? They need not be separate. They could be incorporated

into a plastic plate, curved to fit the local configuration on each brain by milling out a plastic slab with its contained electrodes.

Granted that multiple-controlled electrical stimuli could produce a localized pattern of light spots in a normal visual cortex, would blind people see a similar picture? Are the cortical cells dead? Riesen raised newborn chimpanzees in the dark for over two years, and found they failed to learn to recognize the commonest objects. Hubel and Wiesel obtained a similar result with kittens whose lids had been sutured together for months after birth. Thus the congenitally blind cannot be expected to benefit from stimulation of the visual cortex. However, they total less than 1 percent of the blind. Adult cats, however, after being deprived of light for a similar period showed no change from the normal in response of cortical cells to light on the retina. This gives us reason to believe that the visual cortex of the blind has not necessarily degenerated, and thus should give responses subjectively much like the normal.

It is known from the researches of Kuffler that the normal retina shows a standby activity. Might not this maintain the visual cortex in those who are blind merely from failure of the image-forming mechanism, as with cataract of the lens, while those whose retina has been destroyed, as with diabetes, vascular disease and possibly glaucoma might show an inert cortex? Statistics on the numbers of the blind from various causes indicate that in 27 percent the retina is destroyed, with the possibility of another 14 percent from glaucoma. So the retina is receiving light, but not an image, in the remaining 50 to 60 percent. There seems to be no reason why these should not benefit from electroneuroprosthesis. These should be the patients first scheduled for operation.

Granted that the use of the device should enable a considerable proportion of the blind to visualize patterns and spots of light, would this be of any real use? This subject was discussed in the original prospectus, which stated that orientation by light would be practicable even if only a few stations were feasible, while with a grill of 25 or more, words could be spelled out, at least.

We are not sure how many electrodes could be utilized. Anatomically, the display of the macular region would indicate that a set of 100 for only the macula would be easily accommodated. John Lilly fitted a monkey's brain with a cap containing 640 electrodes. Physiologically, we conclude from the magnificent studies of Hubel and Wiesel on evoked potentials from single cells in the cat's and

monkey's visual cortex, that a very large number could be used to advantage. Individual cortical neurons are keyed not only to specific stations of the visual field, but to a bar of light oriented at a specific angle and moving either from off to on, or on to off. Other cells respond to quadrilaterals of light, not only at a certain station but of a certain orientation and size. Narrow columns of cells tend to have similar characteristics, hence, there is specificity of function, when normally innervated anyway, that goes far beyond any contemplated stimulation program. We may dream, however, of someday using a large number of closely packed electrodes to stimulate these specific cortical cell columns, the patient determining the receptive parameter of each, that is direction and shape, by being fired one after another and telling a computer what is being sensed. Once programmed, an image fed into the computer would be analyzed by location and characteristics of the components, and it would select the proper electrodes to be stimulated, which would then in the mind's eye sum up to a picture, just as it does with all of us, right now.

Finally, we must ask, is enough of the visual cortex accessible for a useful prosthesis? The macula covers the occipital pole, and the macula gives us most of our information. For example, it is not possible to read time on a clock 5 degrees away from the macula. The occipital pole is accessible, convex and not beset with deep sulci which cannot be reached by electrodes. The calcarine sulcus, medially placed, and deep, is another matter. Most of the peripheral field is spread along its upper and lower lips, hence accessible to the creased handle of a bent spoon-shaped plastic plate incorporating the electrodes. But the large calcarine artery runs the length of the sulcus deep within, and a series of branches run out over its lips. Perhaps it would be better to let the calcarine sulcus alone and thus ignore the far lateral field. The medial field of one eye covers the lateral field of the other, except for the monocular crescent. Moreover, when the eyes are turned to the side the macula resolves the detail seen but dimly when peripheral. We can only be grateful that relenting Nature has placed the macular fields on the occipital pole, and has magnified them so enormously that man's crude attempts to replace the exquisite mechanisms of the body are not too bungling and out of scale!

This was the analysis of the problems underlying visual electroneuroprosthesis in the address of February 1968. Auditory and motor prostheses were also reconsidered, but there is not time to go into details here.

Again, as a result of a routine press release there were newspaper stories, but fewer, and much less public reaction. This was at the time of the first heart transplant and in the last 20 years the public had become unresponsive to medical miracles--especially when only predicted. To me the important result of this episode was having the opportunity to exchange thoughts with some fine men in Veteran's Administration and Rehabilitation, and Leslie Clark of the American Foundation for the Blind. One organization even expressed interest and asked for an estimate of costs.

Now, the denouement! In mid-July of this year I first became aware of the paper of Brindley and Lewin of Cambridge, England, in an issue of the British Journal of Physiology that apparently reached the library table at the end of May. They had done it! An array of 80 electrodes was placed over the visual receptive cortex of a 52-year-old woman blind for five years from bilateral glaucoma. When the individual electrodes were fired a point of light "like a star in the sky" was visualized at some definite location in the dark. The subjective localization remained the same for each electrode, and when several electrodes were fired concurrently a reproducible pattern of phosphenes was generated. The reactions have an immediate and sharp "off" and "on" response and they do not seem to fatigue or blur. Electrodes as close as 2-1/2mm. on the visual cortex produced phosphenes which can be easily distinguished.

There is no need to say any more, though certain valuable observations were made, except to quote from the conclusions of Brindley and Lewin:

> "The resolving power of the cortex for electrical stimuli is especially satisfactory; it seems likely that the number of electrodes could be increased to at least 200 per hemisphere and all the phosphenes remain resolvable. Our findings strongly suggest that it will be possible, by improving our prototype, to make a prosthesis that will permit blind patients not only to avoid obstacles when walking, but to read print or handwriting, perhaps at speeds comparable with those habitual among sighted people."

At a stroke the future of the care of the blind has been transformed from hopelessness to hope. If, indeed, Electroneuroprosthetic centers are speedily developed into a reality the lives of the blind will have meaning for themselves, and have use to society; the care of the blind will be transformed from a dismal drudge to a guidance of development; and the welfare burden of the nation and the community will be lightened.

All who have undergone tragic disaster know that the ray of hope is all important. But that hope is transformed into despair, which is worse than hopelessness, if no issue is found. This nation, gifted with wealth and skills, must respond to the certainty, as it did not respond to the prediction, by immediately instituting centers for electroneuroprosthesis, taking advantage of this sudden lifting of the curtain that has kept us from constructive manipulation of the cerebral cortex, not only for therapy and development of electroneuroprosthesis--visual, auditory, motor, and the unknown, but also for the increase of our knowledge of that last, greatest mystery, the cerebral cortex itself, and in so doing gain for this nation a share in the achievement where the way has been shown, though twenty years have been lost by its failure to respond to the prediction.

INSTITUTIONAL OR HOME CARE: A STUDY OF DECISIONS BY PARENTS WITH YOUNG MONGOLOID RETARDATES*

Nellie D. Stone

Abstract

The study sought to determine factors indicative of appropriate or inappropriate placement decisions, in regard to family adjustment to the impact and presence of a congenitally defective, mongoloid child under the age of nine years. Of the 103 intact families studied retrospectively, 50 were applicants awaiting admission of their mongoloid children to New Jersey institutions for the retarded. The remaining 53 families were nonapplicants, most of whom were identified by two retardation clinics serving northern New Jersey. From July, 1963 through April, 1964, data was collected by four experienced social caseworkers, during home visits. Each father and mother was successively interviewed, according to a structured schedule, to report sociodemographic data, reactions to the birth of the mongoloid child, experiences leading to the application decision, and current willingness for placement. On paper and pencil instruments, the parents indicated their knowledge about their child's handicap, attitudes toward his care, ranking of family goals, compatibility with other family members, and current adaptiveness to their situation. On the basis of social casework judgment, the interviewers rated the family's adequacy of functioning in eight areas of family life and individual adjustment, according to the Geismar scale specifications.

By statistical analysis, data were tested for significance of differences of strength of association, while attitudinal responses were reduced to fifteen factors. Significant differences were found in the families' sociodemographic characteristics, and in cognitive, experiential, attitudinal, and interpersonal factors, which were associated with level of family functioning and appropriateness of placement intention.

*Submitted in partial fulfillment of the requirements for the degree of Doctor of Social Welfare, School of Social Work, Columbia University.

Parents showed less tolerance toward the older group of mongoloids, particularly boys, aged five to nine years, whom they were more willing to institutionalize, and whose presence was associated with poorer family adjustment. The adequacy of parental knowledge about mongolism and mental retardation was inversely correlated with placement willingness, and positively associated with attitudes indicative of crisis resolution, as well as with professional judgments of satisfactory family functioning. Active participation in parents' organizations was associated with both accurate knowledge about mongolism, and desire for home care of the child.

Only 20 of the applicant families were willing for immediate institutionalization, if admission had been offered at time of the interview, while the other 30 applicants indicated their wish to postpone placement. The situations of these two groups of families and the nonapplicants differed significantly with respect to factors indicating appropriateness of the placement decision. The placers enjoyed the least adequate socioeconomic situations, and showed the poorest relationships and overall family adaptation, according to their own reports, as well as the interviewers' evaluations. Placement of their mongoloid children was considered necessary, so that the family situations might be relieved and possibly improved.

The nonapplicants' generally adequate environment, personal and family relations, and their unity of purpose, indicated that their consistent desire for home care of their mongoloid children represented appropriate and stable decisions. While the postponers' social situations were the most favorable, and they reported high levels of information and social adaptation, it was postulated that these parents had not yet resolved their ambivalence about the mongoloid child, as suggested by their premature applications and subsequent indecisiveness regarding placement, as well as by signs of weakness in family relations and maternal adjustment.

The general concurrence between interviewers' judgments and the parents' reports indicating family adjustment, suggested confidence in the professional evaluations.

It was recommended that adequate information and counseling services be made readily available to parents at the time of birth of the congenitally handicapped child, to enable them to make sound care decisions, and to foster favorable family adaptation. Longitudinal, rather than cross-sectional study, beginning at the time of birth, was suggested for further investigation of the patterns and process of family response to this crisis.

REVIEW OF SELECTED LITERATURE

A survey of the major journals and publications in the field of mental retardation for the past 15 years, reveals considerable interest in the question of whether institutional or home care is advisable for children with various types of retardation. Only recently have there appeared studies concerned specifically with placement of mongoloid children or their impact upon the family. Table 1 classifies the pertinent studies or articles according to their focus upon the mongoloid or other kind of retardate, and gives abbreviated descriptions of the type and methods of investigation. These selections include both statistical and case studies which are reviewed for comparative findings and suggestions of fruitful areas for further study. In the discussion that follows, the numbers in parentheses following the author's name indicate location on the table.

Demographic Characteristics and Social Status of the Retardates and Their Families In Relation to Institutional Decision

Wunsch[1] (6) presents a profile of the characteristics of 77 mongoloids and their families who comprised 20 percent of the caseload of a state clinic for evaluation of non-institutionalized retardates. His figures generally support Giannini's[2] (1) description of families of mongoloid infants awaiting state institutional admission, as being predominantly white and of middle or upper social class. However, Kelman's[3] (3) study families with mongoloid children, were largely of middle and lower class status. When other types of retardation are considered, the profile varies from Tizard's[4] (10) finding of no social class difference between families of institutionalized and noninstitutionalized retardates, to Ehler's[5] (11) report of predominantly working class families of noninstitutionalized retardates seen in a community agency. The fathers in Farber's[6] (12) and Schonell's[7] (9) studies are of predominantly white collar occupation and middle class status. Saenger[8] (14) concludes that lower class, deprived families in New York City, who are mainly of minority ethnic groups, are most likely to place their retarded children. In view of the range of characteristics portrayed in these reported studies, there seems to be a need for further delineation of the demographic and social status features of mongoloid children whose parents make a placement decision.

The Impact of the Retarded Child Upon the Adjustment of Individual Family Members and the Functioning of the Family Unit

Kelman's[9] (3) comparison of matched samples of families reveals no consistently different living patterns or maternal attitudes between families with a mongoloid child and those with no retarded member. In contrast, Farber's[10] (12) study of severely retarded children of various types suggests that certain kinds of families are helped to maintain integrated functioning by the strategy of institutionalization, whereas other families who keep their retardates at home tend to experience adjustment difficulties. However, Farber[11] points out the need to study families while the retardate is still present in the home, in order to account for differences in parent-child interaction which might influence some families toward placement.

The desirability of comparing families representing both kinds of placement decision before the retarded child leaves the family circle is also supported by the results and implications of other studies. In Tizard and Grad's[12] (10) survey, the adjustment of families of institutionalized retardates is deemed to be enhanced by virtue of the resulting increase in living space and income available for the rest of the family, as well as by the removal of actual or potential management problems with the retarded child. Caldwell and Guze[13] (7), comparing matched samples of families who had placed their retarded child with those who had not, find no significant differences in adjustment of mothers or "key" siblings. However, they do not settle the question of whether or not the adjustment of those families who had placed was as good before as after the removal of the retarded child. Schonell's[14] (9) survey of families with retardates in the home suggests that their presence is associated with extensively restrictive and disruptive effects on the family's economic, social, and emotional functioning. However, since the above studies do not focus specifically upon families with mongoloid retardates, examination of the family impact in this segment seems to be indicated in order to refine and extend the findings.

Some data pertaining to families of mongoloids has been provided by Kramm's[15] (4) study of 50 cases, about half of whom had applied for and were awaiting institutional admission. Although few statistical findings are given, the frequency tabulations suggest a more favorable overall picture for nonapplicant than for applicant families, on the basis of interview responses and the researcher's judgment of the mongoloid's impact upon various family aspects. Replication and extension of these findings through statistical testing of a larger study group seems desirable.

In general, Kramm concludes that all members of the family are affected by the advent and presence of the mongoloid child, and that changes in family organization as well as reorientation to social values are required to achieve an adjustment to this crisis. Farber[16] (12) postulates that reorganization of the family around the focus of children, parents, or home enables some families to maintain solidarity, and that institutionalization is associated with this kind of adjustment. Further elucidation of adaptive family response to the crisis of mongolism seems called for through examination of placement decisions while the retarded child is still in the home.

The question of whether the presence of a retarded child at home adversely affects siblings is answered differently by various investigators (as well as by physicians and other family advisers), and thus also bears further investigation, particularly among families with mongoloid children. While Graliker[17] (8) finds no significant ill effects among the teenagers studied, Farber[18] (12) detects more maladjustment in sisters of retarded children at home than in those whose siblings had been institutionalized. Kramm[19] (4) has noted that siblings of mongoloids for whom institutional application has been filed tend to feel more social embarrassment than do those in nonapplicant families. Kugel[20] (5), however, received largely positive responses from the families he questioned on this matter. Caldwell[21] (7) suggests that siblings generally adopt the value systems of their parents in relating to the retarded child in the family. Some further attention to this aspect, although not of major emphasis, may provide more data on these questions in regard to adaptation of siblings and parents of mongoloid retardates.

Parental Attitudes and Experiences Influencing Their Willingness to Place Retarded Children

Kramm,[22] Saenger,[23] Tizard,[24] and Giannini[26] all point to the heavy influence of medical recommendations on early and often premature plans for placement, particularly in the case of mongoloid infants. These authors and Gordon[26] emphasize parental need for supportive counsel and adequate information, if they are to withstand the stress of the birth of a retarded child and achieve a sound plan for his care. Deficiencies in the kinds of assistance provided by community and professional services are linked, by the first four authors cited above, with poor parental adjustment and placement decisions of questionable validity. Consequently, study of parental opinions concerning the helpfulness of services received at the time of crisis should prove useful in developing more effective help to families.

TABLE 1

Principal Investigator, Subject, Locality & Date	Number: Home	Number: Inst	Sample or Population Characteristics	Focus of Investigation	Techniques and Instruments
Studies Focused Specifically Upon Mongoloids and/or Their families					
1. Giannini: Counseling families during the crisis reaction to mongolism. New York City, 1963	40	38	Mongoloid infants on waiting list for state institution.	Evaluation impact on family of mongoloid's birth & effect of clinical & counselling service at crisis point.	Clinical case study; exploratory analysis of parental response to individual & group counselling. Demographic & social characteristics.
2. Gordon: Reactions of parents to problems of mental retardation in children. Brooklyn, 1956.	?		Parents of young mongoloids known to M. J. Solomon Clinic for Retarded Children.	Reactions of parents and their total life adjustment to their mongoloid children.	Exploratory review of case reports; classification of types of parental adjustment.
3. Kelman: Effects of a group of non-institutionalized mongoloids on their families. New York City, 1959	20) ages) 0-16 20)		Families with mongoloids Families of normal children (Matched pairs according to age, sex, position, race, religion, social status, size)	Mother's percepts of effect of mongoloid on family life and attitudes.	Experimental and control groups. Statistical analysis & hypothesis test. Modified PARI; indices of 8 family life areas.

4. Krauss: Reactions & patterns of adjustment of the family to its mongoloid child. Pittsburgh, 1958 (1963)	50 (23 applicants for placement included)		Mongoloids 3 to 32 years in families known to various community agencies.	Parents' reactions & family adjustments to presence of mongoloid in the home.	Case study: structured home interview & observance. Administration of Vineland S.M. Scale. Analysis of demographic & social factors.
5. Kugel: Comparison of institutionalized & non-institutionalized mongoloid children. Iowa, 1961.	34	21	(placed during 1st year) Mongols, average age 8 to 9 years. (Medical Center & State institutionalized patients)	Characteristics & development of mongoloids & families; parents' attitudes & siblings adjustment.	Mail questionnaire to parents (80% response). Analysis of institution records. Retrospective questionnaire regarding early development.
6. Wunsch: Characteristics of mongoloids evaluated in state diagnostic clinic. Rhode Island, 1957.	77		Mongoloids up to 18 years: 16% under 5 years 47% ages 5 to 9 years 37% 10 to 18 years	Demographic characteristics of mongoloids & families; description of disposition of mongoloid.	Statistical analysis of case record data; judgments of medical & psychological examiners re disposition of mongoloid.
Studies Including Mongoloids as a Significant Part of Their Population					
7. Caldwell: Study of adjustment of parents & siblings of institutionalized & non-institutionalized retarded children. St. Louis, 1960.	16 8	16 10 mongoloids included)	Ages 2 to 7 years, matched age, sex, ord. position, social status.	Adjustment of mother & key sibling (next to retardate); attitudes toward retarded child.	PARI, IQ, psychiatric & psychological interviews; Chn's. Manif. Anx. Sc.; family attitude scale. Statistical analysis, hypothesis testing.

TABLE 1 (Continued)

Principal Investigator, Subject, Locality & Date	Number: Home	Inst	Sample or Population Characteristics	Focus of Investigation	Techniques and Instruments
8. Graliker: Teenage reaction to a mentally retarded sibling. Los Angeles, 1962	16 (12 mongoloid)		Under 6 years of age. 21 teenage siblings included.	Attitudes, social & family relations of normal siblings, as affected by retarded child.	Ratings by interviewers according to professional judgment of family relationships & attitudes.
9. Schonell: Survey of the effects of subnormal child on the family unit. Australia, 1956.	50 (16 mongoloids)		5 to 17 years. Not representative sample. Members of parent organization.	Adjustment and characteristics of families and retardates.	Home interview to obtain mother's responses & observations; statistical analysis of quantitative & qualitative data.
10. Tizard: The mentally handicapped and their families. London, 1961.	150 (59 25	100 21 12	Ages to 44 years Repres. matched for age & sex mongoloids included with: under 11 years)	Characteristics & adjustment of retarded & their families; parent opinion re social, medical services, placement decision.	Survey data from records & home interviews; analysis of frequency distributions with chi-square testing of significance.

Studies of Various Types of Retardates and Their Families

11. Ehlers: Mat. percepts of retarded & use of common services for moderate & severely retarded children. Boston, 1964	24		Families known to public health clinic for retarded children.	Mother's percepts, expers, use of common resources. Demographic & social class.	Unstructured interview of mothers; Case records review, staff interview. Exploratory, no statistical analyses.
12. Farber: 3 studies of family crisis & decision to institutionalize several retarded children. Chicago, 1959-60.	268	(62 placement applicants included)	Ages under 16 years. Purposive sampling. Middle class, parent organization.	Mother's & father's percepts & attitudes; demographic social-psychological variables.	Home interview; statistical analysis & hypothesis test; Guttman scores, Indices of marital integration, impact.
13. Grebler: Parental attitudes toward mentally retarded children. New York City, 1952.	11		Cases tested at Education Clinic of City College	Parental attitudes.	Case studies; Classifications; hypotheses suggested.
14. Saenger: Factors influencing the institutionalization of mentally retarded individuals in New York City, 1960.	500 (220	500 220 matched groups included)	Representative sample. Ages 0 to 18 & over	Demographic characteristics, mother's attitudes, adjustment of retarded & family, evaluation of community services	Home interviews, case records, census data, judgments, ratings & indices. Statistical analysis.

TABLE 1 (Continued)

Principal Investigator, Subject, Locality & Date	Number: Home Inst	Sample or Population Characteristics	Focus of Investigation	Techniques and Instruments
15. Stone: Parental attitudes toward mental retardation. Washington, D.C., 1948	44	Families known to child guidance clinic.	Parents' feelings and awareness of mental retardation.	Records of case interviews analyzed and classified.
16. Worchal: The parental concept of the mentally retarded child. Texas, 1961	22	Ages not given. No information re selection. (22 mothers, 17 families included)	Acceptance-rejection by mother & father of retardate, compared to normal siblings, "ideal," other children.	Parental ratings of personality traits on 7-point scale. Statistical analysis, hypothesis testing.
17. Zuk: Maternal acceptance of retarded children & studies of attitudes & religious background. Philadelphia, 1959, 1961.	72	Ages 1 to 13 years (mean 4.7 years) IQs 12 to 85 (mean 45)	Relation of religious background & observations to expressed maternal attitudes of acceptance of retardate.	Mail questionnaire; responses factor-analyzed in relation to demographic variables & professional ratings of maternal acceptance.

The importance of adequate parental psychological capacities, as well as situational resources, for coping with the stresses of mental retardation is emphasized by Gordon.[27] Kramm's[28] dissertation concludes that mutuality of parental religious beliefs, in addition to the mother's ability to care for and consistently discipline the mongoloid child, supports family solidarity. The examination of maternal attitudes by Zuk[29] suggests greater "acceptance" of retarded children by intensely religious mothers as reflected in their responses concerning discipline and dependency of the child. Conversely, Saenger[30] speculates that parental attitudes are less important determiners of placement decision than are the family's social and economic situations.

Grebler,[31] however, hypothesizes that parental rejection of a retarded child is associated with attitudes of self-blame and guilt. Stone[32] notes in our competitive, achievement-oriented society, a cultural factor which possibly deters mothers from feeling free to express love for their defective (hence deviant) children.

The above cited reports indicate an impressive recent development of interest in and study of the impact on the family of the retarded child, mongoloid or otherwise. While the available findings are not all clear cut or consistent, these variations serve to emphasize the need for further research activity to fill the gaps in knowledge about sound bases for placement decisions.

REFERENCES

1. Wunsch, W. L. "Some Characteristics of Mongoloids Evaluated in a Clinic for Children with Retarded Mental Development," *American Journal of Mental Deficiency*, 1957, Vol. 62, pp. 122-130.

2. Giannini, M. J. and Goodman, L. "Counseling Families During the Crisis Reaction to Mongolism," *American Journal of Mental Deficiency*, 1963, Vol. 67, pp. 740-747.

3. Kelman, H. R. "The Effects of a Group of Non-institutionalized Mongoloid Children upon their Families as Perceived by their Mothers." Unpublished doctoral dissertation, New York University, 1959.

4. Tizard, J. and Grad, J. C. *The Mentally Handicapped and their Families.* London: Oxford University Press, 1961.

5. Ehlers, W. H. "The Moderately and Severely Retarded Child: Maternal Perceptions of Retardation and Subsequent Seeking and Using Services Rendered by a Community Agency," *American Journal of Mental Deficiency*, 1964, Vol. 68, pp. 660-668.

6. Farber, B. and others. "Family Crisis and the Decision to Institutionalize the Retarded Child," *Research Monograph of the Council for Exceptional Children*, 1960, Series A, No. 1.

7. Schonell, F. J. and Watts, B. H. "A First Survey of the Effects of a Subnormal Child on the Family Unit," *American Journal of Mental Deficiency*, 1956, Vol. 61, pp. 210-219.

8. Saenger, G. *Factors Influencing the Institutionalization of Mentally Retarded Individuals in New York City.* Albany, New York: State Interdepartmental Health Resources Board, 1960.

9. Kelman, H. R., *op. cit.*

10. Farber. B. "Family Organization and Crisis: Maintenance of Integration in Families with a Severely Mentally Retarded Child. *Monographs of the Society for Research in Child Development*, Serial No. 75, 1968, Vol. 25, No. 1.

11. Farber, Bernard and others, *op. cit.*

12. Tizard and Grad, *op. cit.*

13. Caldwell, B. M. and Guze, S. B. "A Study of the Adjustment of Parents and Siblings of Institutionalized and Non-institutionalized Retarded Children," *American Journal of Mental Deficiency*, 1960, Vol. 64, pp. 845-861.

14. Schonell and Watts, *op. cit.*

15. Kramm, E. R. *Families of Mongoloid Children.* Washington: U.S. Children's Bureau Publication No. 401, 1963.

16. Farber, *op. cit.*, p. 5.

17. Graliker, B. V. and others. "Teenage reaction to a Mentally Retarded Sibling," *American Journal of Mental Deficiency*, 1962, Vol. 66, pp. 838-843.

18. Farber, B. "Effects of a Severely Mentally Retarded Child on Family Integration," *Monographs of the Society for Research in Child Development*, Serial No. 71, 1959, Vol. 24, No. 2.

19. Kramm, Elizabeth R., *op. cit.*

20. Kugel, R. B. and Reque, D. "A Comparison of Mongoloid Children," *Journal of The American Medical Association*, 1961, Vol. 175, pp. 959-961.

21. Caldwell and Guze, *op. cit.*

22. Kramm, *op. cit.*

23. Saenger, *op. cit.*

24. Tizard, *op. cit.*

25. Giannini, *op. cit.*

26. Gordon, E. and Ullman, M. "Reactions of Parents to Problems of Mental Retardation in Children," *American Journal of Mental Deficiency*, 1956, Vol. 61, pp. 158-163.

27. *Ibid.*

28. Kramm, *op. cit.*

29. Zuk, G. H. and others. "Maternal Acceptance of Retarded Children: A Questionnaire Study of Attitudes and Religious Background," *Child Development*, 1961, Vol. 32, pp. 525-540.

30. Saenger, *op. cit.*

31. Grebler, A. M. "Parental Attitudes toward Mentally Retarded Children," *American Journal of Mental Deficiency*, 1952, Vol. 56, pp. 475-483.

32. Stone, M. M. "Parental Attitudes to Retardation," *American Journal of Mental Deficiency*, 1948, Vol. 53, pp. 363-372.

AN INEXPENSIVE BRAILLE TERMINAL DEVICE

Gary B. Anderson and David W. Rogers
Lawrence Radiation Laboratory,*
University of California
Livermore, California

Abstract

The active use of time-shared facilities for blind programmers requires a braille terminal system. Details are given for the construction of a brailler from a Model 33 teletype by modifying the print head and increasing the resiliency of the platen. A description of the programming needed to drive the brailler is presented.

INTRODUCTION

Professional programming as an occupation offers a unique advantage to the blind in that they can compete with sighted programmers with little physical disadvantage.[1] Most of the problems that occur involve communication between programmer and machine. These have been solved in the past by building special devices which allow the blind to read cards and inspect the operating console; by writing special programs which can use existing printer/computer facilities to convert standard output into braille listings; and by devising methods by which the blind can produce cards or programming sheets. The solutions proposed have generally been aimed at the small computer center or batch processing installation where the programmer can gain physical access to the machine.

With the introduction of time sharing, availability of the line printer and main console for special purposes has decreased to a low level, making it difficult for the blind to have proper machine communication. It is desirable that the blind have time sharing access to the machine. A proper solution is to design a remote console which will accept

*Work performed under the auspices of the U.S. Atomic Energy Commission.

suitable input from the user (typewriter keyboard) and respond with some form of braille. With a device of this type a blind programmer is the equal of a sighted programmer. A remote console gives the blind user the added advantage of being able to work in his office, thus relieving him of the trip to the computer center.

Se Several methods of constructing a terminal unit have been considered. The first is to use a small computer or hardware device to drive an electrified braille punch. The second is to modify a paper punch to produce braille patterns on paper tape either by punching or embossing. A third approach is to modify existing equipment (Model 33 Teletype) to emboss braille on standard roll paper. The last two methods can use the time shared computer to do the character conversion needed to produce braille. The first method has the advantage that little or no programming is necessary, but the disadvantage of high hardware cost. The use of a paper punch is simple and inexpensive, but it produces poor quality braille in a poor format (tape). The existing-equipment approach is inexpensive, the equipment can be returned to its normal function, and it produces braille comparable in size and quality with standard braillers. This last method has been chosen as the best for our installation considering cost and quality at the expense of programming.

THE REMOTE BRAILLER

A Model 33 Teletype has been modified to emboss the seven possible braille columns on standard Teletype paper. This unit is driven through the time sharing system by a program which converts each teletype character into two characters. The first represents the left half of the braille character and the second represents the right half. Each braille character is separated from the following character by a space. Vertical line spacing is accomplished through program control. Each full line (72 characters) is embossed as nine lines (three braille lines). The braille output is read by folding the paper forward over the Teletype and hand scanning from left to right, bottom to top.

TELETYPE MODIFICATIONS

The following modifications have been made to the Model 33 Teletype (none of these prevent the return of the unit to the production of standard output):

1. The Teletype print wheel has been modified (Figs. 1 and 2) to emboss the seven braille columns. This was accomplished by removing the type from the wheel and inserting pins. Each pin corresponds to one braille dot. To prevent extraneous dots from appearing, the braille columns are placed in alternate type positions on the wheel. All columns are positioned on the same vertical level. The extension of the pins beyond the surface of the wheel has been adjusted to account for the resiliency of the platen, the force of the hammer and the curvature of the platen.

2. The Teletype platen has been covered by a 1-inch diameter length of rubber surgical tubing 1/16-inch thick. This provides the backing necessary to emboss the braille dots easily without perforating the paper.

3. The ribbon has been removed.

4. The edge of the plastic window has been bent down toward the platen to allow the braille line to be read two lines after it has been formed (Fig. 3). This modification is not necessary, but is a convenience to the reader.

5. The wire paper guide in front of the platen has been removed to provide room for modification 4.

If the user is willing to wait a little longer (four braille lines) before reading a braille line, modifications 4 and 5 can be eliminated. Given a braille wheel and the rubber backing, any Teletype can be converted to a brailler in a few minutes.

PROGRAMMING

The program needed to drive the brailler is a simple character converter. It converts each internal character into the Teletype characters which correspond to the left and right braille columns (Table 1) and then follows these characters with a blank. These characters and then transmitted instead of the original. Note that the braille columns are inverted with respect to the way they will appear in the output. This is due to the inversion of the braille characters as the paper is moved forward over the teletype to be read. The conversion routine also supplies a carriage return and three line feeds at the end of each braille line.

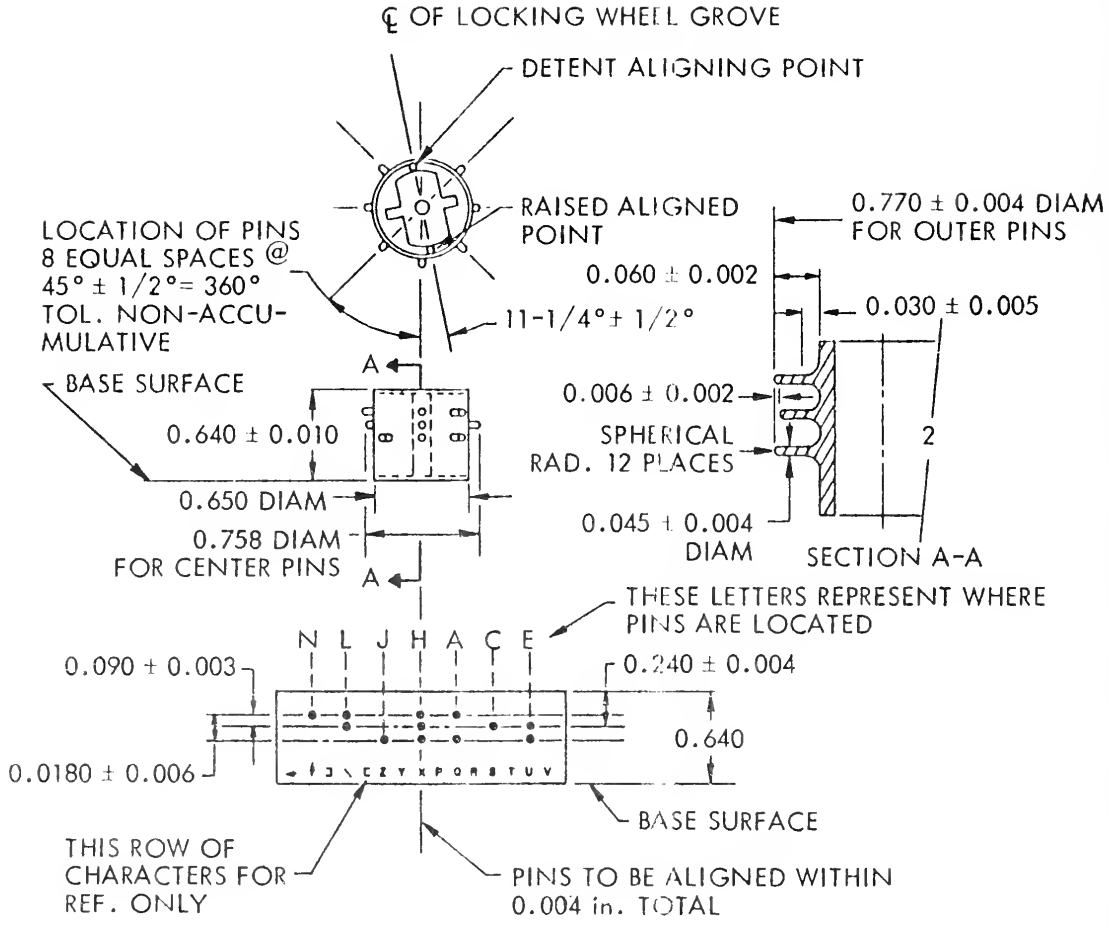

Figure 1. Details of Braille Wheel

TABLE 1

Teletype Character Subset with Braille Representation and Brailler Left and Right Column Equivalents

Character	A	B	C	D	E	F	G	H
Braille								
Equivalent	JG	EG	JJ	JE	JC	EJ	EE	EC

Character	I	J	K	L	M	N	O	P
Braille								
Equivalent	CJ	CE	AG	HG	AJ	AE	AC	HJ

Character	Q	R	S	T	U	V	W	X
Braille								
Equivalent	HE	HC	LJ	LE	AN	HN	CH	AA

Character	Y	Z	1	2	3	4	5	6
Braille								
Equivalent	AH	AL	CG	LG	CJ	CL	CN	LC

Character	7	8	9	ø	(	)	*	-
Braille								
Equivalent	LL	LN	NC	NL	HL	LH	JN	NN

Character	+	.	b
Braille			
Equivalent	NA	GA	GG

There are two methods for using a conversion program in conjunction with a time sharing system. The first is to embed the conversion routine directly in the system operational programs (Teletype driver programs). There are two advantages:

1. The user can have braille communication with any existing program without making any special provisions for braille.

2. All of the system messages are translated into braille.

Unfortunately, adding specialized routines for particular input/output devices is quite inconvenient. The second method is the incorporation of the conversion program as part of a particular program (compiler, editor, object program). This is an easy task and allows the user direct access to a conversational program. We selected the second method because we wished to implement the braille system with the least programming effort.

IMPROVEMENTS

It would be advantageous to disconnect the keyboard of the Teletype from the printer, as "garbage" characters are produced when a message is typed in. The present braille program echoes each input message and the elimination of spurious characters would give the user a complete braille copy of his conversation with the machine.

Some inexpensive method to collect the paper at the front of the machine should be devised. Now the paper either falls over the keyboard or must be torn off at short intervals.

CONCLUSIONS

The operation of the modified Teletype brailler has proved to be very effective in use. The braille produced is easy and convenient to read. Hardware modifications and programming were easy and inexpensive. Reliability of the overall system approaches that of a nonbraille system. With the exception of a few system messages, a blind programmer has complete access to conversational programs to which the character conversion has been added.

Acknowledgements

The authors would like to express their appreciation to Dr. J. R. Slagle, W. C. Wilson, J. R. Sypolt and S. S. Nakano for their help in the design, production, and testing of the original device.

REFERENCES

1. Sterling, T., Lichstein, M., Scarpino, D., and Stueb-ing, D. "Professional Computer Work for the Blind," *Comm. ACM 7*, Vol. 4, (1964), pp. 228-230, p. 251.

A COMPARISON OF THE EFFICACY OF TWO METHODS OF MOBILITY TRAINING FOR THE BLIND, USING BLINDFOLDED SIGHTED SUBJECTS

Jack F. Curtis and David M. Winer*
C. W. Shilling Auditory Research Center
Groton, Connecticut

Abstract

Two methods of mobility training currently being used with the blind were evaluated by measuring the travel performance of seven groups of blindfolded sighted subjects following training with various combinations of training methods. The subjects' travel performance was measured on a one-block course in a small town. Each subject made two round trips on this course. A balanced design was used, with some groups receiving no training, some receiving only one type, and some receiving both types, either between the two trips or prior to them. The results indicate that there is no statistically significant difference in travel time or path on the sidewalk among any of the groups.

INTRODUCTION

Traveling through his environment is one of the principal problems faced by the newly blinded individual. The training method most often used today consists of walking the trainee through various environments accompanied by a sighted mobility instructor. The instructor points out various obstacles, assists the trainee with the various acoustic and tactual cues. This is admittedly a hazardous and difficult method of training. Two alternative methods have been proposed and the present study is an evaluation of these methods, using sighted blindfolded travelers.

*Mr. Curtis is now with the Speech and Hearing Center, Wayne State University, Detroit, Michigan. Mr. Winer is now with the Department of Psychology, Trinity College, Hartford, Connecticut.

DESIGN OF THE STUDY

The two methods evaluated in this study were tactile maps and binaural recordings. The tactile map is a model of a given environment in which the important characteristics of this environment are scaled down and different surfaces are used to model the various surfaces in the environment. Figure 1 is a schematic of the tactile map of the test mobility area in Mystic, Connecticut. The course with which we hoped to familiarize blindfolded sighted travelers was a one block section of the main street in this small New England town. The second method of training used a binaural recording made by moving down this one block area with a cart on which is mounted a model of a human head, constructed of materials that duplicate human integument, with cast pinnae and condenser microphones mounted in the external auditory meati of the model.

Figure 1. Schematic of the Tactile Map

Appendix A describes the instrumentation for the binaural recordings. Appendix B summarizes the content of the training recording. The tactile map is described in detail in Appendix C.

The measure of performance in this mobility area consisted of an estimation of the path taken on the sidewalk and the time of travel. The first was estimated by selecting ten equidistant points on the length of the sidewalk. The width of the walk at each of these points was divided into six-inch intervals. As the subject moved down the sidewalk he would cross some specific division on the width of the sidewalk. This was noted as his travel path at that point. The deviation of each point from the mean was then computed. The mean of these deviations yielded an average deviation which was also used in the analysis of travel path.

SUBJECTS

Twenty-eight sighted, blindfolded subjects were used in the experiment to allow a balanced experimental design. The subjects were divided into seven groups of four each:

1. (T/T) This group traveled the mobility area twice.

2. (T/M/T) This group traveled, used the tactile map, and traveled again.

3. (T/Tp/T) This group traveled, listened to the tape, and traveled again.

4. (T/Tp/M/T) This group traveled, listened to the training tape, used the model, and traveled again.

5. (Tp/T/T) This group listened to the tape and traveled twice.

6. (M/T/T) This group felt the model and traveled twice.

7. (Tp/M/T/T) This group listened to the tape, felt the model, and traveled twice.

RESULTS AND CONCLUSIONS

Table 1 shows the average amount of each subject's deviation from his own preferred path on each of the travel trips, and the difference in mean average deviation between Trip I and Trip II. A quick tabulation shows that just as

many subjects deviated more on the second trip (relative to their own performance on the first trip) as those who deviated less. However 23 of the subjects traveled the second trip faster, no matter what the condition.

Table 1

Mean Average Deviation and Total Time of Travel (Round Trip) on Each of Two Trials for Each Subject in the Seven Groups

		Mean Avg. Deviation in Six-inch Units			Total Time in Seconds		
		Trial		Diff.	Trial		Diff
Condition	Subj.	I	II	I-II	I	II	I-II
(T/T)	1	1.80	1.98	-0.18	410	302	108
	2	2.79	4.27	-1.48	445	331	114
	3	6.54	2.24	4.30	296	368	-72
	4	2.70	2.50	0.20	534	458	76
(T/M/T)	5	3.45	2.70	0.75	380	191	189
	6	1.86	1.44	0.42	306	246	60
	7	2.07	2.39	-0.32	343	330	13
	8	2.07	2.33	-0.26	489	368	121
(T/Tp/T)	9	3.21	3.10	0.11	196	236	-40
	10	2.00	3.45	-1.45	270	309	-39
	11	2.48	2.24	0.24	288	217	71
	12	3.29	1.57	1.72	326	256	70
(T/TpM/T)	13	2.65	2.32	0.33	287	239	48
	14	4.24	2.06	2.18	572	381	191
	15	2.32	3.52	-1.20	450	367	93
	16	3.22	2.95	0.27	1060	805	255
(Tp/T/T)	17	1.92	2.62	-0.70	370	235	135
	18	1.91	2.16	-0.85	308	304	4
	19	1.82	2.22	-0.40	588	367	221
	20	3.50	2.21	1.29	252	233	19
(M/T/T)	21	2.46	2.85	-0.39	656	407	249
	22	2.43	2.07	0.36	205	217	-12
	23	1.97	3.25	-1.28	570	422	148
	24	4.06	4.23	-0.17	189	168	21
(TpM/T/T)	25	2.55	1.94	0.61	512	414	98
	26	4.06	4.55	-0.49	372	413	-41
	27	2.70	1.68	1.02	515	449	66
	28	2.30	2.40	-0.10	202	172	30

We next examined the data to find the effect of the training on either the subject's travel time or his preferred path. Analysis of variance results are presented in Tables 2 and 3. Table 2 shows that there was no significant difference in the path traveled for any of the groups on either of the trips, whether the travel was before or after training. That is, two trips through the mobility area yield as much change in performance as two trips and some training, in terms of deviations from the subject's preferred path. Because lateral deviation during travel should not be influenced by either training with a model as a simulated trip through the medium of binaural tape recording, one would predict the result as obtained.

Analysis of variance of travel time yielded somewhat different results. Although there was still no difference between conditions, there was a significant difference in travel time between the two trials, as seen in Table 3.

Table 2

Analysis of Variance on Deviation from Mean Path

Source of Variation	Sum of Squares	df	Mean Square	F	P
Between conditions	4.731	6	0.7885	0.7606	---
Between subjects in same group	21.769	21	1.0366		
Total between subjects	26.500	27			
Between trials I & II	0.470	1	0.4700	0.6575	---
Interaction: " x cond.	4.097	6	0.6828	0.9552	---
Interaction: subjects x trials	15.011	21	0.7148		
Total within subjects	19.578	28	0.6992		
Total	46.267	55			

Table 3

Analysis of Variance on Travel Time

Source of Variation	Sum of Squares	df	Mean Square	F	P
Between conditions	303,369	6	50,561	1.122	---
Between subjects in same group	946,045	21	45,049		
Total between subjects	1,249,414	27			
Between trials I & II	85,331	1	85,331	21.167	0.01
Interaction: " x cond.	22,972	6	3,828	0.972	---
Interaction: subjects x trials	82,699	21	3,938		
Total within subjects	191,002	28			
Total	1,440,416	55			

Since the analysis of variance revealed a significant difference in the total travel time for the two trials, *t* tests were performed to evaluate particular findings of potential importance. There are numerous ways to compare the various conditions, but only the most important were calculated, with the following results:

1. The difference between the means of Trial I and Trial II for the four subjects in the (T/T) condition is not significant.

2. Twelve subjects received some training between the two travel trips, those in Groups (TTpT), (TMT), and TTpMT). Although the differences in travel time with intervening training was greater than the differences in the Travel-Travel groups, it is not statistically significant.

3. The travel time on the second trip for these 12 subjects, after intervening training, was significantly faster than on the first trip at the 0.10 level (one-tailed test).

4. Twelve subjects received training before either travel trip was made, those in Groups (TpTT), (MTT), and (TpMTT). When the travel times for the first trip are compared to the times for the 16 subjects who traveled first, before any training, no significant difference is found.

5. The first travel time of all 16 subjects who traveled first, i.e., (TT), (TMT), (TTpT), and (TTpMT), was compared with the times of the final trip for all subjects who received some training (all but the 4 subjects of the TT Group), significant difference was found at the 0.01 level (one-tailed test).

These comparisons clearly indicate that there is an effect of the training on the travel time, but since the n is so small within each group, and the range of travel time is so large within some groups, a clear-cut statement of which training is the most important cannot be made.

It can be observed from the data that there is a very slight trend toward smaller mean average deviations for those who receive training over those who receive no training, but it is not statistically significant.

These comparisons indicate that training results in a shorter travel time, but only if the subject travels the area prior to his training, regardless of the type of training. This result appears logical when one considers that the subjects in this study had never been exposed to tactile maps nor to binaural recordings, so that they were exposed to auditory and tactile phenomena which had no correlates in their experience until the travel through the area. We might hypothesize that this result would not have occurred if the subjects were experienced in the use of tactile maps and/or binaural recordings.

Our results disagree with those of J. V. Tobias ("Binaural Recordings for Training the Newly Blind," *Perceptual and Motor Skills*, 1965, Vol. 20, pp. 385-391) who found longer travel times. However, the tasks undertaken by Tobias' subjects was much different in that his subjects were guided by pure tones through several rooms in a laboratory area and the acoustic events were not at all commonplace.

CONCLUSIONS

From the data of this experiment we may conclude tentatively that binaural recordings and tactile maps may be used as training devices to provide significantly shorter and more accurate travel through common environments encountered by the blind. Improvement due to the training may only be apparent after the subject is thoroughly familiar with the training devices, i.e., tactile maps and binaural recordings.

APPENDIX A

A Block Diagram of the Equipment Used in Producing the Binaural Recordings

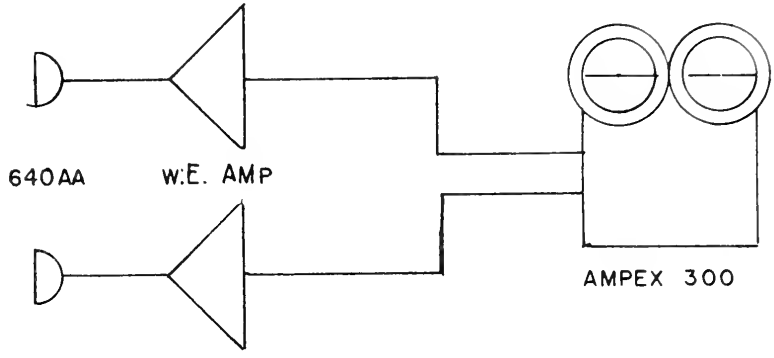

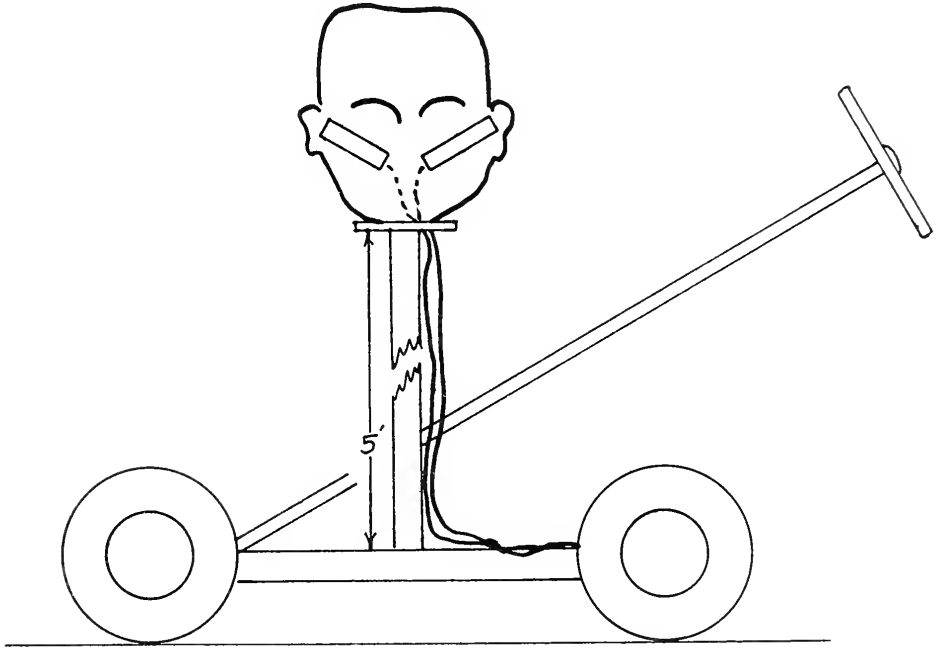

For the stationary recordings the unit usually remained on the go-cart, but in some instances the head and supporting column were removed and used alone. The tape unit was positioned centrally along the one-block route in which the recordings were made. The microphone cables could be extended to a maximum length of 150 feet.

APPENDIX B

Description of Binaural Training Tape Number One

The first five minutes of this recording consisted of a dubbing of a commercially available recording which traces, with examples, the development of recording from foil cylinders to modern sterophonic popular and classical music records. The next segment consists of about 15 minutes of recordings done in the one-black mobility area. These were made with the artificial head stationary. There are examples of various types of traffic noises, such as car horns, car doors closing, car and truck engines being accelerated and passing, and pedestrians passing. These examples are described following their presentation and then they are played again. Some special examples are presented three times. Following the stationary examples, the moving recordings are presented. These consist of segments presented without comment in which the artificial head is passed up or down the street at various positions on the sidewalk and under various acoustic conditions of traffic in the street and on the walk. The description and explanation follows the presentation of the recording in its entirety.

The total listening time for the training tape is approximately 40 minutes. The subjects were permitted to hear the training tape as many times as they chose.

APPENDIX C

Description of the Tactile Map

The tactile map used in familiarizing the subject with the area is shown in schematic form below. The map is approximately four feet long. The various paved surfaces are denoted by various roughnesses of sandpaper, (rougher for the street and smoother for the sidewalk). The grassed areas were covered with felt. The buildings are constructed of balsa wood and illustration board. The utility poles in the area are only suggested by stumps, that is, they are not completely modeled with cross ties since these are of no importance to the individual at ground level. They are also thicker than scale. Both sides of the street were included on the map, as we had planned to use both sides in future experimentation.

Name: Angled Cane Tip

Source: Emerson Foulke
Perceptual Alternatives Laboratory
University of Louisville
Louisville, Kentucky 40208

Availability: Experimental

Six-inch nylon cane tip, bent to a 105-degree angle. It is equipped with a lock nut which can be tightened against the cane shaft to hold tip in position, that is with the free end pointing upward and the elbow against the ground when the cane is held in the usual position. In this position, the tip forms an angle with the surface over which it passes of approximately 30 degrees. This shaping of the cane tip permits more exploration of ground surfaces without risk of cane being caught in surface irregularities.

Name: Audible Signal for those with defective eyesight

Source: Handikappinstitutet
Bromma 3, Sweden

Availability: Prototype produced. Tests proceed.

Audible signal device consisting of a contact mat intended to be placed on the ground in front of a kiosk, etc. When a person stands on the mat an audible signal is sounded.

Name: Clinitest Reading Device

Source: American Center for Research in Blindness and Rehabilitation
The Catholic Guild for All the Blind
770 Centre Street
Newton, Massachusetts 02158

Availability: Laboratory prototype under test

The 1967 American Foundation for the Blind pamphlet, *Blindness and Diabetes*, stressed that "unfortunately, no effective method has been developed to help the blind diabetic gain independence in conducting tests for sugar content."

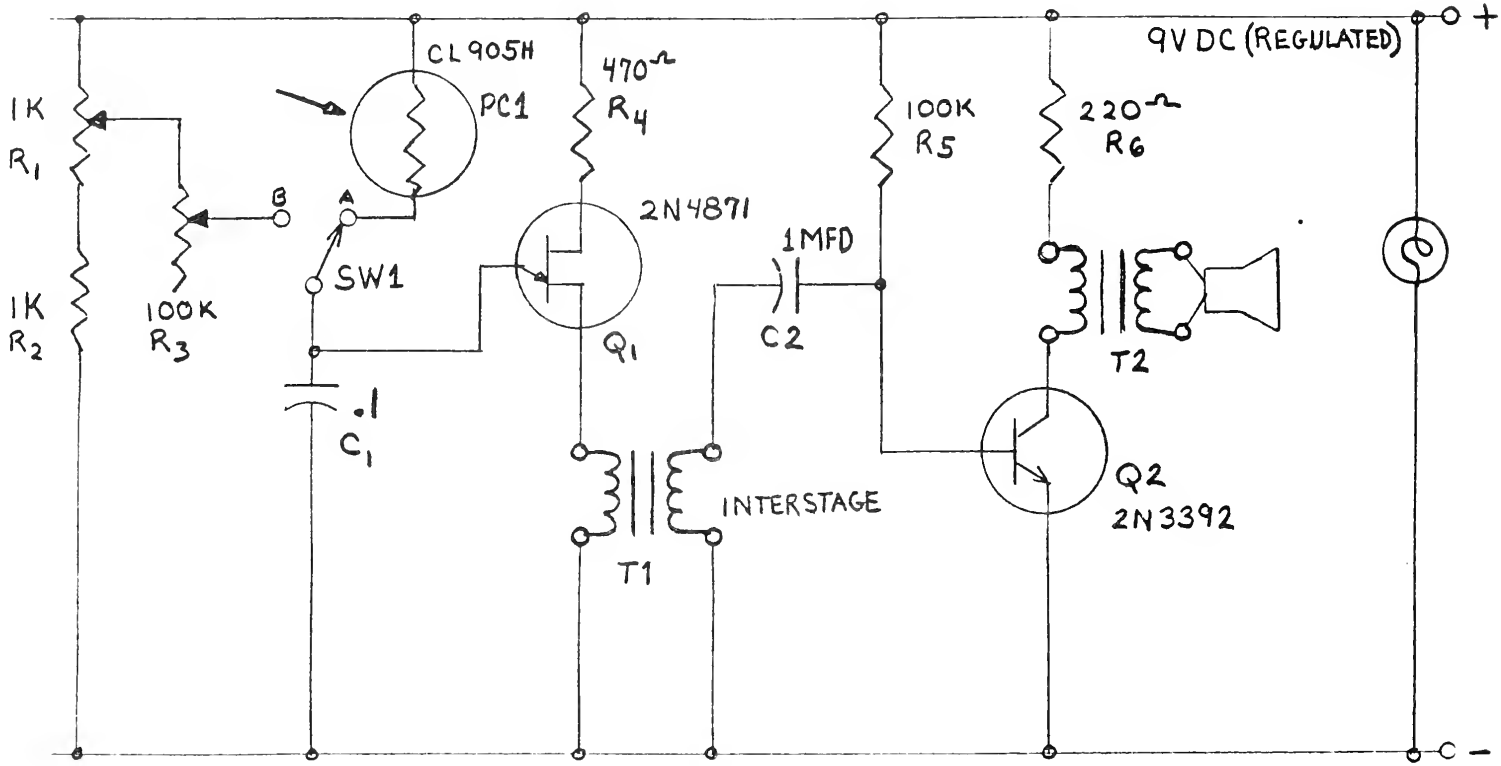

Figure 1. Electrical Components Required for the Comparison Oscillator

At ACRIBAR, the problem was assigned to E. Luttropp and R. Jenner early in 1968. Their solution, submitted July 1968, is shown in Figs. 1 and 2.

Two models of the ACRIBAR device have been built and tested. One is being used by E. Luttropp, him self a blind diabetic; the other is being used for additional tests at St. Raphael's Geriatric Adjustment Center, a division of The Catholic Guild for All the Blind.

The optical arrangement utilizing a fiberoptic bundle to illuminate and inspect the test area of the Clinitest tube is shown in Fig. 2. The bundle serves as a "beam splitter." There are approximately two hundred 0.003-inch fibers in each branch. The common end has the exciter and receptor fibers randomly mixed.

The system operates by comparison of the oscillator's audio frequency which results from photocell resistance (light dependent) with the oscillator's audio freuqnecy which results from potentiometer resistance (position dependent). When the audio tone is the same for either position of SW 1, the potentiometer position indicates the equivalent light intensity. Color is inferred by light intensity rather than spectral distribution.

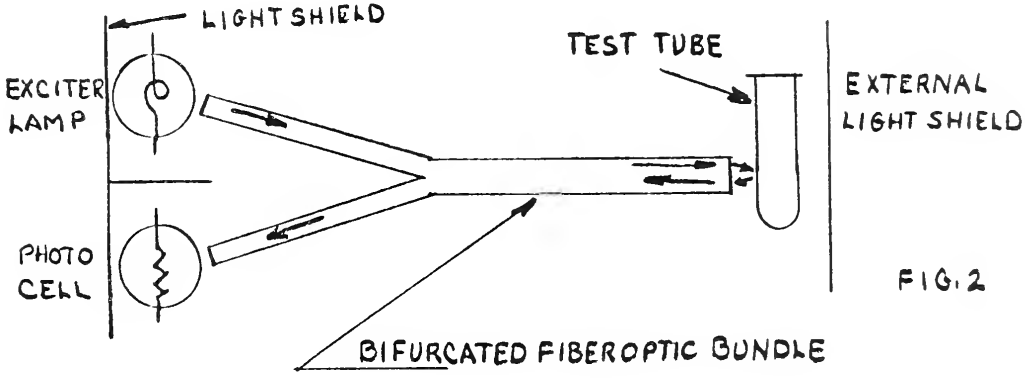

Figure 2

Name: Hypodermic Syringe Loading Device

Source: J. S. Ferguson
Route 1
Junction City, Kansas

Availability: Experimental prototype

The device is designed to permit visually handicapped persons to administer their own injections without the help of a sighted person in loading the syringe. It is intended primarily for the use of visually impaired diabetics. The device has an accuracy of one unit on the U-80 Insulin Scale, or one-half unit on the U-40 Scale. The short-type syringe is removed from the device for injection. Dosage can be varied by the user, and two or more kinds of insulin can be mixed in it if required.

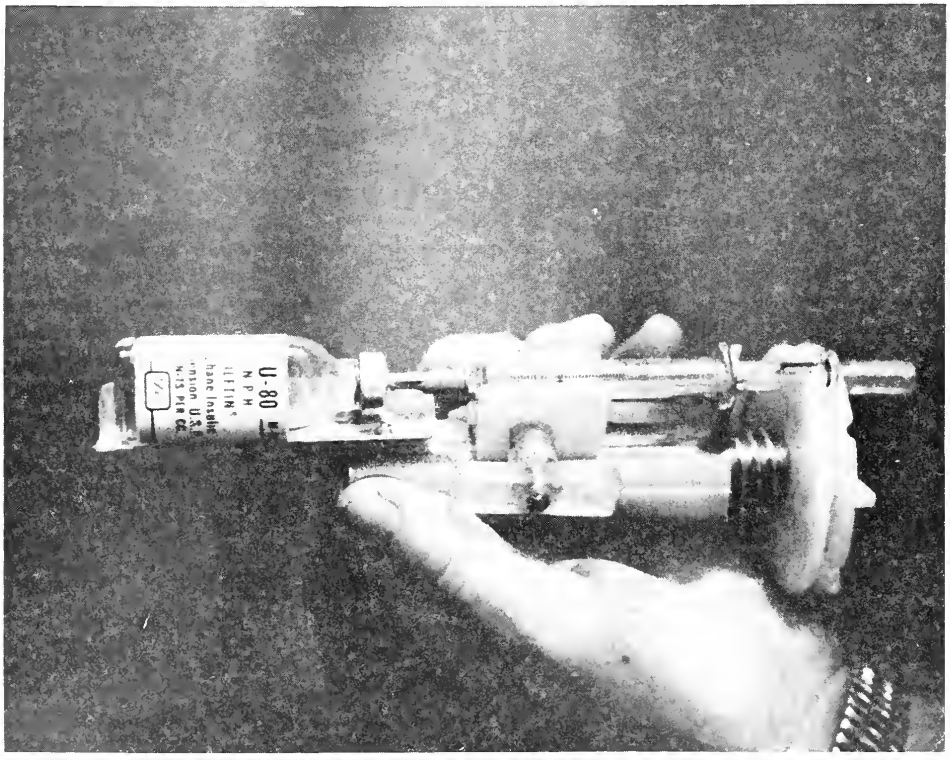

Name: Football for the Visually Handicapped

Source: Handikappinstitutet
Bromma 3, Sweden

Availability: Test results awaited.

Football with acoustic signal for use by blind or partially blind.

Name: Indexing Device for Tandberg Tape Recorder

Source: Handikappinstitutet
Bromma 3, Sweden

Availability: Experimental Prototype

The device will permit owners of Tandberg tape recorder to record, and hear upon playback, indexing signals on recorded tapes.

Name: Insulin Syringe for Blind Diabetics

Source: G. A. Henke GmbH
7200 Tuttlingen
Kronenstr. 16, West Germany

Availability: From Supplier

The syringe consits of a glass barrel with metal mountings. The barrel is fixed in a metal casing with coarse pitch thread on which runs an octagonal dosage nut with a catch for 40 dosages (units) of a 2cc capacity syringe.

Name: Multi-purpose Operational Amplifier

Source: American Foundation for the Blind

A multi-purpose operational amplifier has been designed and the printed circuit boards have been made up. These will be used in future instrument and apparatus development.

Name: Survey of Sensory Aids Needs

Source: Handikappinstitutet
Bromma 3, Sweden

Availability: The first stage, of the previously started analysis of the needs of people with defective vision, has been completed. The results are being used in current planning projects. Studies of the needs of the arm amputees have begun.

This survey will attempt to explore the needs of several impaired and handicapped groups for a variety of sensory and other instrumentation meant to alleviate deficits in function and performance. The first phase of analysis of the needs of visually impaired persons is completed; the results are now being used in project planning to meet those needs. A study of the needs of arm amputees is now under way.

Name: Tactile Sensor

Source: Handikappinstitutet
Bromma 3, Sweden

Availability: Prototype modified, tests proceed.

Tactile display for the blind or deaf. Two variants as displayed.

Research and Development
in
AIDS FOR THE BLIND
Sponsored by the
Prosthetic and Sensory Aids Service
Veterans Administration

July 1968

Definite progress has been made in aids for the blind in recent years in the areas of mobility and reading machines. The Veterans Administration, with relatively limmited funds, has been able to develop small numbers of test models of several devices. Already these have proved to be useful for a few selected blind persons benefitting from carefully designed training programs. A small additional number of blinded veterans will benefit from reading and mobility aids during Fiscal Year 1969; additional dissemination will depend both on the acceptance of present developments and on the further refinements inevitable in pioneering work.

In the early 'Fifties, the Veterans Administration evaluated the best devices resulting from the excellent program of the Committee on Sensory Devices of the National Research Council, initiated by the wartime Office of Scientific Research and Development, briefly sustained by the Army, and then supported by the Veterans Administration. Haverford College evaluated the Signal Corps travel aids production-engineered and manufactured by Radio Corporation of America. The University of Michigan developed training methods and then evaluated the A-2 "reading pencil," a readily portable direct-translation reading device designed by RCA. Veterans Administration also supported a small evaluation by the University of Rochester of 20 magnifiers for the partially sighted.

Work on mobility aids at Haverford College and at Bionic Instruments, Inc. has led to a three-laser cane, combining the best features of the long cane with means to overcome its acknowledged shortcomings. One laser beam with associated photocell detector and tactile indicator, providing an optical ranging system for objects ahead, allows more relaxed walking without fear of hitting obstacles or striking people's legs; further, the adjustable ranging feature allows detection of certain more distant landmarks as navigational aids. A second laser beam projected forward and downward ahead of the cane tip normally provides assurance of extended level walking surface but provides earlier warning of flights of stairs, edges of subway platforms, or other major holes or discontinuities; thus the user can walk more rapidly and confidently. The third laser beam, pointing upward, detects overhanging branches, signs, casement windows, or other hazards

likely to be missed because they are above the handle of the conventional long cane. The Bionic laser cane, in spite of some present limitations in sensitivity for low curbs and its risks of false signals in a few situations like mud puddles, provides such significant advances over conventional long canes that demonstrations have stimulated widespread interest. Ten additional copies are being constructed for clinical application studies, probably at Hines and Palo Alto VA Hospitals.

Substantial progress also has been made over more than a decade on a variety of reading machines for the blind, each fulfilling a specific need and aimed at supplementing, not replacing, Talking Books, braille, and sighted readers. The Veterans Administration organized numerous discussions and conferences with individuals and agencies concerned not only with these aids for the blind but also with psychology, linguistics, physical sciences, technologies aimed at other areas, and with reading machines for broader commercial application. Based upon these conferences as well as upon its earlier work, the Veterans Administration sponsored development of what seemed the best ideas. In spite of limited funds compared with the inherently difficult problems, several devices now have reached modest clinical trials. The simplest and most readily portable are the Mauch Visotoner and Visotactor personal-type aids which directly translate print into audible or tactile patterns. At Hines VA Hospital a few blind persons are learning to use these instruments by taking a 200-lesson training course developed under VA contract by psychologists at Battelle Memorial Institute. Hadley School for the Blind has developed a 25-lesson screening course on magnetic tapes, intended for home study, to help select those blinded persons most likely to benefit from longer personalized instruction with the Visotoner. A motivated, highly trained user can slowly decipher personal correspondence, bank statements, or other private documents, "read" price tags, etc., or identify paper money. Mauch Laboratories are making 30 additional Visotoners and 10 Visotactors for further clinical studies in FY 1969.

At a more sophisticated level, Mauch Laboratories are making three more copies of the experimental Cognodictor, a portable complete recognition-type reading machine likewise intended for personal ownership. Signals from additional photocells in a Visotactor (needed to find and scan lines and to adjust for type size) are used by the Cognodictor to identify letters printed or typed in a variety of fonts. The machine pronounces "spelled speech" coalescing in word-like groups, based on the work of Metfessel.

Haskins Laboratories hopes to test in FY 1969 their compiled speech as an output for a still more complex

library-type reading service. Haskins will also continue to develop even more elaborate synthetic speech, aiming at the highest reading speeds, most natural speech sounds, and least training, at the expense of the most complex machinery and the logistics problems of distributing output, perhaps on tape.

Further information may be obtained in notes on the work of the Veterans Administration's research contractors and in major scientific papers in the semiannual Bulletin of Prosthetics Research. Though no subscriptions are possible, this publication may be purchased at modest cost from the Superintendent of Documents, U.S. Government Printing Office, Washington, D.C. 20402. If you wish to be notified when future issues of the Bulletin become available for purchase, please write to:

Research and Development Division
Prosthetic and Sensory Aids Service
Veterans Administration
252 Seventh Avenue
New York, N.Y. 10001

A LASER CANE FOR THE BLIND*

J. M. Benjamin, Jr., T. A. Benham, D. R. Bolgiano,
E. D. Meeks, Jr.
Bionic Instruments, Inc.
221 Rock Hill Road
Bala Cynwyd, Penna. 19004

For the past several years a continuing effort under sponsorship of the Veterans Administration has been made to develop an electronic aid for the blind traveler. Its intended purpose is to warn of dangers in the traveler's path soon enough to allow the graceful application of evasive action, thus reducing the danger and nerve strain attendant on

*A slightly edited and updated version of the paper on page 364 of the Digest of the 7th International Conference on Medical and Biological Engineering, 1967, Stockholm. The paper was originally presented at Stockholm by Mr. Benjamin on August 17, 1967.

blind travel, and increasing travel speed. Advancing technology has permitted gradual reduction of size and weight with each succeeding model until it has now become possible to house a complete device in a 1-1/3 pound cane. The Bionic Model C-4 Laser Typhlocane (early 1968) has one quick-disconnect joint to allow the cane to be collapsed to two sections for more convenient stowage when not in use. The Nylon-tipped shaft of the lower section is made of an extremely light but stiff material, epoxy reinforced with boron filaments.

The device emits pulses of infrared light which, if reflected from any object in front of it, are detected by a photodiode placed beyind a receiving lens. The angle made by the diffusely reflected ray passing through the receiving lens is an indication of the distance to the object detected. This principle of "optical triangulation," first used by Cranberg[1] for this purpose in 1943, was chosen in preference to an ultrasonic approach because of its simplicity, reliability, and small beam width.[2,3] Recently Kay[4] has developed a quite good ultrasonic device, which, while it gives more information about the nature of the object detected, requires more training for proficient use than does the cane.

The cane emits three beams to look simultaneously down, straight ahead, and upward. The downward channel will warn of any drop-off larger than 9 inches which appears approximately 2 paces in front of the traveler. The most serious of these would be a down-going flight of stairs, the edge of a train platform, or an open manhole or cellar-way, but large down-curbs can also frequently be detected. A low-pitched tone emitted by a tiny transducer in the cane notifies the user.

The straight-ahead beam, about 2 feet high, has a maximum range adjustable out to 12 feet in front of the cane tip by means of a button located near the user's thumb. Any obstacle detected within this range will actuate a tactile stimulator that contacts the index finger when the cane is carried in the usual "long cane" manner.

The upward-looking beam will detect obstacles at head height appearing directly above the cane tip. In preliminary studies, it was determined that earlier warning was confusing, while this distance still gave time enough to evade tree branches, signs, and awnings, which the cane traveler normally has no reliable way of detecting. Warning is given by a high-pitched tone. Each of the three beams is only 2 inches wide at 10 feet, so objects may be located with considerable precision by suitable scanning. The usual procedure is to twist the wrist slightly in a rhythmic fashion while walking.

Three gallium-arsenide room-temperature injection lasers are connected in series to emit 0.1 microsecond pulses of 9,000Å light 40 times per second. Outputs from three silicon photodiodes are each separately amplified, filtered, and synchronously gated (to eliminate response to accidental flashes of extraneous light) and then used to control the appropriate tone generator or stimulator. Power consumed is 600 milliwatts from a 12-volt nickel-cadmium rechargeable battery.

Special attention has been paid to keeping the weight low and to distributing it so that the cane will approximate the "feel" of a conventional long cane.

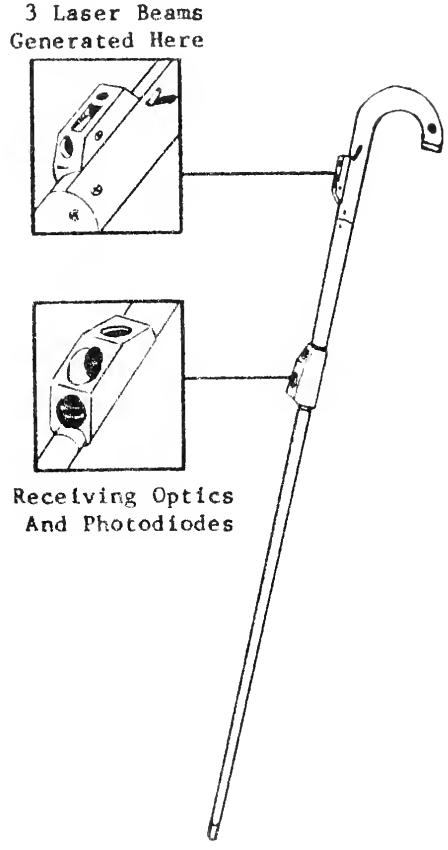

REFERENCES

1. Cranberg, Lawrence. "Sensory Aid for the Blind," *Electronics*, March, 1946, Vol. 19, No. 3, pp. 116-119.

2. Benham, T. A. and J. M. Benjamin, Jr. "Active Radiating Systems: An Electronic Travel Aid" in L. L. Clark (ed.), Proc. Int. Cong. on Tech. and Blindness, Vol. I, New York: American Foundation for the Blind, pp. 167-176, 1963.

3. Benham, T. A. "The Bionic Instruments Travel Aid," in R. Dufton (ed.), Proc. Int. Conf. on Sensory Devices for the Blind, London: St. Dunstan's, pp. 255-274, June 1966.

4. Kay, L. "Ultrasonic Mobility Aids for the Blind," in L. L. Clark (ed.), Proc. Rotterdam Mobility Research Conf. New York: American Foundation for the Blind, pp. 9-16, May, 1965.

Note: The following information on sensory devices for the blind appeared in the U.S. Veterans Administration's *Bulletin of Prosthetics Research*, January 1969:

Aids for the Blind

The first two Mauch Visotoners (of an order for 30 Visotoners and 10 Visotactors) have been delivered, with the other expected shortly. Seven of 10 Bionic Instruments laser canes are nearing completion. Five initial subjects are making good progress on the Hadley School Correspondence course for screening candidates for the Visotoner. A proposal for a broader clinical application study of reading devices is being drafted, expanding on current efforts at Hines VA Hospital.

Bach-y-Rita, P. "Neural Substrates of Sensory Substitution," in R. Klinke and O. J. Grusser, (eds), *Pattern Recognition in the Biological and Technical Systems*, Berlin: Springer-Verlag, in press.

Bach-y-Rita, P. "Neurophysiology of Eye Movements." in *The Control of Eye Movements*, in press.

Bach-y-Rita, P., and others. "Display Techniques in a Tactile Vision-Substitution System," *Medical and Biological Illustration*, January 1970, Vol. 20(1), pp. 6-12.

Benjamin, J., Jr. "A Review of the Veterans Administraiton Blind Guidance Device Project," *Bulletin of Prosthetics Research, BPR 10-9*, Spring 1968, pp. 63-90.

Gergman, M., Rusalem, H., Malles, I., Schiller, V., Cohan, H., and McKay, E. *Auditory Rehabilitation for Hearing-Impaired Blind Persons*, (ASHA Monographs, Number 12). Washington, D.C.: American Speech and Hearing Association, March 1965, Vol. 4, 96 pp.

Bliss, J. C. (ed.) *The Technical Digest for the 8th Annual IEEE Symposium on Human Factors in Electronics*. New York: The Institute of Electrical and Electronics Engineers, Inc., 1967. Price $5.00.

Cohen, A. "Noise Effects on Health, Productivity, and Well-Being," *Transactions of the New York Academy of Sciences*, May 1968, Series II, Vol. 30(7), pp. 910-18.

Elliott, E., Elliott, P. H., and Roskilly, D. *Sonic Mobility Aid: St. Dunstan's Instructional Manual*, London, England: St. Dunstan's, July 1969.

Freiberger, H. "Progress on Veterans Administration Research Projects in Sensory Aids," *Bulletin of Prosthetics Research*, BPR 10-9, Spring 1968, pp. 193-201.

Correction: Research Bulletin #18, page 271: Freiberger, H. "Sensory Aids," *Bulletin of Prosthetics Research*, BPR 10-7, Spring 1967. Corrected to read: Freiberger, H. "The Sixth Technical Conference on Reading Machines for the Blind," *Bulletin of Prosthetics Research*, BPR 10-5, Spring 1966, pp. 8-25.

Hertzberg, R. "Twenty-Five-Year Follow-up of Ocular Defects in Congenital Rubella," *American Journal of Ophthalmology*, August 1968, Series 3, Vol. 66(2), pp. 269-71.

Hulek, A. *Teoria i Praktyka Rehabilitacji Inwalidow (Analiza w Aspekcie Fizycznym, Psychologicznym, Spolecznym i Zawodowym)*. (Translated title: Theory and Practice in Rehabilitation of the Disabled: Physical, Psychological, Social and Vocational Analysis). Warsaw, Poland: Panstwowy Zaklad Wydawnictw Lekarskich, 1969.

Jordan, J. E. *Attitudes Toward Education and Phsyically Disabled Persons in Eleven Nations*. Research Report 12. East Lansing, Michigan: Michigan State University Latin American Studies Center, 1968.

Juurmaa, J. "A Comparative Analysis of the Effects of Blindness and Deafness on Psychic Functions," *The Eye, Ear, Nose and Throat Monthly*, November, 1968, Vol. 47(11), pp. 553-61.

Lairy, G. C. "Problems in the Adjustment of the Visually Impaired Child," *The New Outlook for the Blind*, February 1969, Vol. 63(2), pp. 33-41. (Translated and adapted from *Les Annals d'Occulistique*, May 1967.)

Lauer, H. L. "The Visotoner: A Personal Reading Machine for the Blind," *Bulletin of Prosthetics Research*, BPR 10-9, Spring 1968, pp. 99-103.

Lotterman, S. H., Kasten, R. N., and Revoile, S. G. "An Evaluation of the CROS-Type Hearing Aid," *Bulletin of Prosthetics Research*, BPR 10-9, Spring 1968, pp. 104-09.

Lowman, E. W., and Klinger, J. L. *Aids to Independent Living: Self-Help for the Handicapped*. New York: McGraw-Hill, Blakiston Division, 1969.

McClung, R. R. "Short Term Field Evaluation of Type 8A9 Ultrasonic Aid for the Blind," *Bulletin of Prosthetics Research*, BPR 10-9, Spring 1968, pp. 91-103.

Nance, G., Causey, G. D. "Hearing-Aid Evaluation: An Examination of Two Procedures," *Bulletin of Prosthetics Research*, BPR 10-9, Spring 1968, pp. 119-124.

Rogers, C. H. *The Importance of Vibration Frequency in Tactile Pattern Perception*. NINDS Grant NS-08322. Menlo Park, California: Stanford Research Institute, February 1970.

Silverman, W. A. "Oxygen and Retrolental Fibroplasia in Neonates," *Public Health Reports*, January 1969, Vol. 84(1), pp. 16-17. Conference Report: Sponsored by the National Society for the Prevention of Blindness, Inc., June 1967.

Simon, G. R. "Physical Performance of Hearing Aids as Affected by Receiver Substitution," *Bulletin of Prosthetics Research*, BPR 10-9, Spring 1968, pp. 110-18.

Solntseve, L. "The Upbringing of Blind Children in the Soviet Union," *The New Outlook for the Blind*, February 1969, Vol. 63(2), pp. 42-45. (Translated and slightly abbreviated from *Spetsialnaia Shkola*, 1965, Vol. 114(2), pp. 23-6. Moscow: Institute of Defectology, Academy of Pedagogical Sciences of the RSFSR.

Sensory Aids for the Blind: Report of a Conference Held at the National Academy of Sciences, Washington, D.C., March 30-31, 1967, Committee on Prosthetic Research and Development, National Research Council, National Academy of Sciences, 1968.

"Characteristics of Visually Impaired Persons: United States - July 1963-June 1964," Data from the National Health Survey, *Vital and Health Statistics*, Series 10, no. 46, August 1968.

HV1571 Research Bulletin
R No. 22, December 1970.

c. 6

Date Due

HV1571
R Research Bulletin
AUTHOR
No. 22, December 1970,
TITLE

DATE DUE BORROWER'S NAME